MITSUBISHI ELECTRIC

GOT3000/GOT2000 Series CC-Link IE TSN Communication Unit

User's Manual

GT25-J71GN13-T2

Thank you for choosing Mitsubishi Electric Graphic Operation Terminal (GOT).

Prior to use, please read both this manual and detailed manual thoroughly to fully understand the product.

MODEL	GT25-J71GN13-T2-U
IB(NA)-0800633-F(2512)MEE	

© 2019 MITSUBISHI ELECTRIC CORPORATION

●SAFETY PRECAUTIONS●

(Always read these precautions before using this equipment.)

Before using this product, please read this manual and the relevant manuals introduced in this manual carefully and pay full attention to safety to handle the product correctly.
The precautions given in this manual are concerned with this product.
In this manual, the safety precautions are ranked as "WARNING" and "CAUTION".

⚠WARNING	Indicates that incorrect handling may cause hazardous conditions, resulting in death or severe injury.
⚠CAUTION	Indicates that incorrect handling may cause hazardous conditions, resulting in medium or slight personal injury or physical damage.

Note that the ⚠ CAUTION level may lead to a serious accident according to the circumstances.
Always follow the precautions of both levels because they are important to personal safety.
Please save this manual to make it accessible when required and always forward it to the end user.

[DESIGN PRECAUTIONS]

⚠WARNING

- If a communication fails in data link, the faulty station holds the data link data generated before the communication error. Create an interlock circuit in the sequence program using the communication status information in order that the system will operate safely.
  Failure to do so may cause mis-outputs or malfunctions, resulting in accidents.
  Check the faulty station and the operation status during communication error by referring to the relevant manuals.
- Some failures of cable or communication unit may cause the GOT to keep the outputs on or off.
  Create an external circuit for monitoring output signals that may lead to serious accidents.
  Failure to do so may cause mis-outputs or malfunctions, resulting in accidents.

⚠WARNING

- If a communication fault (including cable disconnection) occurs during monitoring on the GOT, communication between the GOT and PLC CPU is suspended and the GOT becomes inoperative.
  For bus connection (GT27 and GT25 only): The GOT becomes inoperative. Power on the PLC CPU again to reestablish communication.
  For other than bus connection: The GOT becomes inoperative.
  A system where the GOT is used should be configured to perform any significant operation to the system by using the switches of a device other than the GOT on the assumption that a GOT communication fault will occur.
  Not doing so can cause an accident due to false output or malfunction.
- To maintain the security (confidentiality, integrity, and availability) of the GOT and the system against unauthorized access, DoS[*1] attacks, computer viruses, and other cyberattacks from unreliable networks and devices via network, take appropriate measures such as firewalls, virtual private networks (VPNs), and antivirus solutions. Mitsubishi Electric shall have no responsibility or liability for any problems involving GOT trouble and system trouble by unauthorized access, DoS attacks, computer viruses, and other cyberattacks.
  *1 DoS: A denial-of-service (DoS) attack disrupts services by overloading systems or exploiting vulnerabilities, resulting in a denial-of-service (DoS) state.

⚠ CAUTION

- Do not bunch the control wires or communication cables with the main circuit or power wires, or lay them close to each other.
  As a guide, separate the lines by a distance of at least 100 mm (3.94 inches) otherwise malfunctions may occur due to noise.

[MOUNTING PRECAUTIONS]

⚠WARNING

- Be sure to shut off all phases of the external power supply used by the system before mounting or removing this unit to/from the GOT.
  Not doing so can cause a unit failure or malfunction.

⚠ CAUTION

- Use this unit in the environment that satisfies the general specifications described in the User's Manual for the GOT used.
  Not doing so can cause an electric shock, fire, malfunction or product damage or deterioration.
- When installing this unit to the GOT, fit it to the connection interface of the GOT and tighten the mounting screws in the specified torque range (0.36 N•m to 0.48 N•m) with a Phillips-head screwdriver No.2.
  Undertightening can cause a drop, failure or malfunction.
  Overtightening can cause a drop, failure or malfunction due to screw or unit damage.
- Do not directory touch the conductive part or electronic components of the unit.
  This may cause the unit to fail or malfunction.

[WIRING PRECAUTIONS]

⚠WARNING

- Be sure to shut off all phases of the external power supply used by the system before wiring.
  Failure to do so may cause electric shock, product damage or malfunctions.

⚠ CAUTION

- Be careful not to let foreign matter such as dust or wire chips get inside the unit. This may cause a fire, failure or malfunctions.
- Make sure to securely connect the cable to the connector of unit.
  Incorrect connection may cause malfunctions.
- Make sure to house the communication cables connected to the unit in ducts, or fix them with clamps. Failure to do so may cause damage of the unit or the cables due to accidental pull or unintentional shifting of the cables, or malfunctions due to poor contact of the cables.

[STARTUP/MAINTENANCE PRECAUTIONS]

⚠WARNING

- Do not touch the connector while power is on.
  Failure to do so may cause electric shock or malfunctions.
- Before starting cleaning or terminal screw retightening, always switch off the power externally in all phases.
  Not switching the power off in all phases can cause a unit failure or malfunction.
  Undertightening can cause a short circuit or malfunction.
  Overtightening can cause a short circuit or malfunction due to the damage of the screws or unit.

⚠ CAUTION

- Do not disassemble or modify the unit.
  This will cause failure, malfunction, injuries, or fire.
- Do not touch the conductive areas and electronic parts of this unit directly.
  Doing so can cause a unit malfunction or failure.
- When unplugging the cable connected to the unit, do not hold and pull from the cable portion.
  Doing so can cause the unit or cable to be damaged or can cause a malfunction due to a cable connection fault.
- Make sure to touch the grounded metal to discharge the electricity charged in the body, etc., before touching the unit.
  Failure to do so may cause a failure or malfunctions of the unit.

[DISPOSAL PRECAUTIONS]

⚠ CAUTION

- Dispose of this product as industrial waste.

[TRANSPORTATION PRECAUTIONS]

⚠ CAUTION

- Make sure to transport the GOT main unit and/or relevant unit(s) in the manner they will not be exposed to the impact exceeding the impact resistance described in the general specifications of the User's Manual for the GOT used, as they are precision devices.
  Failure to do so may cause the unit to fail.
  Check if the unit operates correctly after transportation.
- When fumigants that contain halogen materials such as fluorine, chlorine, bromine, and iodine are used for disinfecting and protecting wooden packaging from insects, they cause malfunction when entering our products.Please take necessary precautions to ensure that remaining materials from fumigant do not enter our products, or treat packaging with methods other than fumigation (heat method).Additionally, disinfect and protect wood from insects before packing products.

Manual

The following shows manuals relevant to this product.

Manual name	Manual number
GOT3000 Series User's Manual (Hardware) (Sold separately)	SH-082591ENG
GOT3000 Series User's Manual (Utility & Maintenance Functions)	SH-082592ENG
GOT3000 Series User's Manual (Connection)	SH-082593ENG
GOT3000 Series Extension Interface Conversion Unit User's Manual	IB-0800714ENG
GOT2000 Series User's Manual (Hardware) (Sold separately)	SH-081194ENG
GOT2000 Series User's Manual (Monitor) (Sold separately)	SH-081196ENG
GOT2000 Series Connection Manual (Mitsubishi Electric Products) For GT Works3 Version1 (Sold separately)	SH-081197ENG

For the latest e-Manuals and PDF manuals, consult your local sales office.

Compliance with the EMC and Low Voltage Directives

To configure a system meeting the requirements of the EMC and Low Voltage Directives when incorporating the Mitsubishi GOT (EMC and Low Voltage Directives compliant) into other machinery or equipment, refer to "EMC AND LOW VOLTAGE DIRECTIVES" of the General Description included with the GOT used.
The CE mark, indicating compliance with the EMC and Low Voltage Directives, is printed on the rating plate of the GOT.

Compliance with the new China RoHS directive

GOT 相关的基于 “ 电器电子产品有害物质限制使用管理办法 ” 要求的表示方法

Note: This symbol mark is for China only.

含有有害 10 物质的名称、含有量、含有部件
本产品中所含有的有害 10 物质的名称、含有量、含有部件如下表所示。

产品中有害物质的名称及含量

部件名称	有害物质					
	铅 (Pb)	汞 (Hg)	镉 (Cd)	六价铬 (Cr(VI))	多溴联苯 (PBB)	多溴二苯醚 (PBDE)
电路板组件	×	○	○	○	○	○
树脂壳体、电缆、膜材	○	○	○	○	○	○
钣金部件、螺丝等金属部件	×	○	○	○	○	○

部件名称	有害物质			
	邻苯二甲酸二（2- 乙基）己酯 （DEHP）	邻苯二甲酸二正丁酯 （DBP）	邻苯二甲酸丁苄酯 （BBP）	邻苯二甲酸二异丁酯 （DIBP）
电路板组件	○	○	○	○
树脂壳体、电缆、膜材	○	○	○	○
钣金部件、螺丝等金属部件	○	○	○	○

本表格依据 SJ/T 11364 的规定编制。
○：表示该有害物质在该部件所有均质材料中的含量均在 GB/T 26572 规定的限量要求以下。
×：表示该有害物质至少在该部件的某一均质材料中的含量超出 GB/T 26572 规定的限量要求。

Referenced Standard

GB/T 15969.2 (Requirement of Chinese standardized law)

Packing List

After unpacking the box, check that the following products are included.

Model	Product	Quantity
GT25-J71GN13-T2	CC-Link IE TSN communication unit	1
	Mounting screw set (2 screws, 2 stickers)	2
	GOT3000/GOT2000 Series CC-Link IE TSN Communication Unit User's Manual (This manual)	1

1. OVERVIEW

This user's manual describes the CC-Link IE TSN communication unit.
The CC-Link IE TSN communication unit allows the GOT3000 or GOT2000 series to function as a local station (device station) on the CC-Link IE TSN.
For compatible GOTs, refer to the GOT user's manual.
When using the CC-Link IE TSN connection, make the communication setting to perform communication with programmable controllers.

2. SPECIFICATIONS

The general specifications of the CC-Link IE TSN communication unit are the same as those of the GOT.
For the general specifications of the GOT, refer to the GOT user's manual.
The performance specifications of the CC-Link IE TSN communication unit are indicated below.

Item		Specifications
Station type		Local station (device station)
Max. link device points per network	RX	16K points (16384 points, 2Kbytes)
	RY	16K points (16384 points, 2Kbytes)
	RWr	8K points (8192 points, 16Kbytes)
	RWw	8K points (8192 points, 16Kbytes)
	LB	32K points (32768 points, 4Kbytes)
	LW	16K points (16384 points, 32Kbytes)
Max. link device points per GOT	RX	16K points (16384 points, 2Kbytes)
	RY	16K points (16384 points, 2Kbytes)
	RWr	8K points (8192 points, 16Kbytes)
	RWw	8K points (8192 points, 16Kbytes)
	LB	32K points (32768 points, 4Kbytes)
	LW	16K points (16384 points, 32Kbytes)

Item		Specifications
Transmission specifications	Communication speed	1 Gbps, 100 Mbps
	Connection cable	• An Ethernet cable that meets the 1000BASE-T standard: Category 5e or higher (double shielded, STP), straight cable • An Ethernet cable that meets the 100BASE-TX standard: Category 5 or higher (double shielded, STP), straight cable
	Max. station-to-station distance	100 m (conform to ANSI/TIA/EIA-568-B (category 5e))
	Overall cable distance	• Line topology: 12000 m (for connecting 1 master station and 120 device stations) • Ring topology: 12100 m (for connecting 1 master station and 120 device stations) • Other: Depending on the system configuration
	Max. number of cascaded stages	20
	Transmission path	Line topology, star topology, line-star topology, or ring topology
Authentication class		CC-Link IE TSN Class B (Synchronized Realtime Communication)
Max. number of stations per network		121 (1 master station and 120 device stations)
Max. number of networks		239
Communication method		Time division method
transient transmission capacity		maximum 1920 bytes
Internal current consumption		0.92 A
Weight		0.17 kg

3. PART NAMES AND EXTERNAL DIMENSIONS

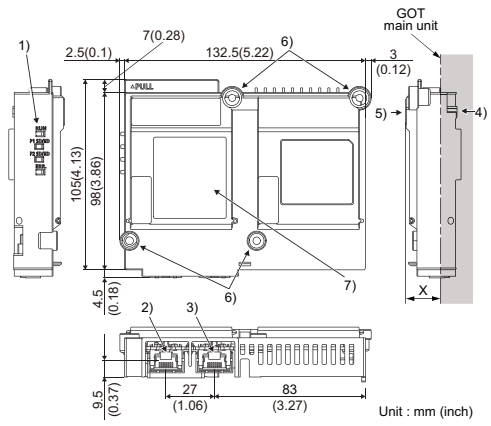

Dimensions of X when the CC-Link IE TSN communication unit is mounted to the GOT

GOT	X
GT37 *1	28 (1.1)
GT27 GT25	19.9 (0.78)

Unit: mm (inch)

*1 The dimension when the CC-Link IE TSN communication unit is mounted on the extension interface converter unit.

No.	Name	Description
1)	Indicator LED	➡ (1) Indicator LED
2)	Connection interface (PORT1 side)	For connecting Ethernet cables ➡ (2) LEDs on a connection interface
3)	Connection interface (PORT2 side)	
4)	Interface connector	Extension connector installed to a front extension unit or the GOT
5)	Extension connector	Extension connector to which a back extension unit is installed
6)	Mounting screw	Mounting screws fixed with a front extension unit or the GOT
7)	Rating plate	-

(1) Indicator LED

A LED indicates the status of the CC-Link IE TSN communication unit and the communication status.

	LED name	Description
RUN	RUN LED	Indicates the operation status. ON: Normal OFF: Error
P1 SD/RD	P1 SD/RD LED	Indicates the data transmission and reception status. ON: Sending or receiving data OFF: Not sending or receiving data
P2 SD/RD	P2 SD/RD LED	
ERR.	ERR LED	Indicates the unit status. ON: Unit error or errors in all stations Blink (200 ms interval): Unit error Blink (500 ms interval): Data link faulty station detected *1 OFF: Normal The LED is off when the GOT is in offline mode. Check the error in [Network Status Display] in the GOT utility. For details on [Network Status Display], refer to the following. ➡ GOT3000 Series User's Manual (Utility & Maintenance Functions) ➡ GOT2000 Series User's Manual (Monitor)

*1 This is available only in the multicast mode.
Note that the LED remains off when a CC-Link IE TSN Class A (Synchronized Realtime Communication) device on a remote station has a data link error.

(2) LEDs on a connection interface

A LED indicates the link status of the CC-Link IE TSN communication unit and the reception status.

	LED name	Description
LINK LED L ER LED	L ER LED	Indicates the data reception status. ON: Abnormal data received OFF: Normal data received The LED is off when the GOT is in offline mode.
	LINK LED	Indicates the link status. ON: Link-up OFF: Link-down

4. INSTALLATION PROCEDURE

⚠ CAUTION

- When installing this unit to the GOT, fit it to the connection interface of the GOT and tighten the mounting screws in the specified torque range (0.36 N•m to 0.48 N•m) with a Phillips-head screwdriver No.2.
  Undertightening can cause a drop, failure or malfunction.
  Overtightening can cause a drop, failure or malfunction due to screw or unit damage.

To install a CC-Link IE TSN communication unit on the GOT3000 series, an extension interface converter unit is required.

For details, refer to the GOT3000 Series Extension Interface Converter Unit User's Manual.

The following shows how to mount the CC-Link IE TSN communication unit on GT2712 as an example.
Mount the CC-Link IE TSN communication unit on the first stage of the extension interface.

1) Turn off the GOT.

2) Pull up the two extension unit cover tabs to remove the covers.

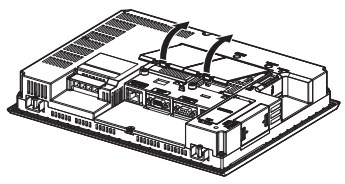

3) Connect the CC-Link IE TSN communication unit to the extension interface on the GOT.
   Tighten four mounting screws to a torque of 0.36 N•m to 0.48 N•m to fix the unit.

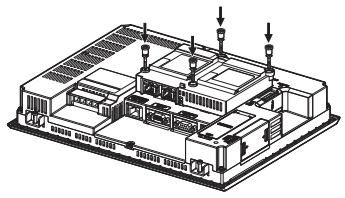

4) When mounting an extension unit on the extension interface of the CC-Link IE TSN communication unit, do not attach the accessory stickers.
   When mounting no extension unit on the extension interface of the unit, cover over four mounting screws with the accessory stickers to guard against static electricity.
   Leave the stickers in place.

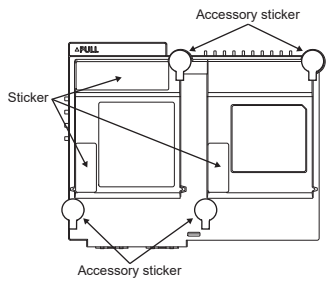

5. PRECAUTIONS FOR WIRING CABLES

1) Confirm the followings on the Ethernet cable used.
   • If there is no disconnection
   • If there is no short circuit
   • If there is no connection problem at the connectors
2) Do not use Ethernet cables with broken latches.
   Using Ethernet cables with broken latches may cause cable disconnection or malfunction.
3) When connecting or removing the Ethernet cables to/from the unit, hold the Ethernet cable connector securely with the hands.
4) Connect the Ethernet cable connector and unit connector securely until you hear a click sound.
5) For connecting Ethernet cables to the unit, the bending radius of the cables must be within the specified range.
   For details, check the specifications of the cables to be used.
6) When connecting an Ethernet cable, do not touch the cable pins or the port pins on the unit, and prevent dirt or dust from adhering to the pins.
   Otherwise, there may be further losses in transmission, causing a communication error in the data link.
7) Wire the connector to the Ethernet cable correctly.
   After wiring, perform a loop test or station-to-station test or others to confirm if the setting and wiring of CC-Link IE TSN communication unit have been done properly.

Warranty

Mitsubishi Electric will not be held liable for damage caused by factors found not to be the cause of Mitsubishi Electric; machine damage or lost profits caused by faults in the Mitsubishi Electric products; damage, secondary damage, accident compensation caused by special factors unpredictable by Mitsubishi Electric; damages to products other than Mitsubishi Electric products; and to other duties.

⚠For safe use

- This product has been manufactured as a general-purpose part for general industries, and has not been designed or manufactured to be incorporated in a device or system used in purposes related to human life.
- Before using the product for special purposes such as nuclear power, electric power, aerospace, medicine or passenger movement vehicles, consult with Mitsubishi Electric.
- This product has been manufactured under strict quality control. However, when installing the product where major accidents or losses could occur if the product fails, install appropriate backup or failsafe functions in the system.

Sales office/Tel

Americas

Mitsubishi Electric Automation, Inc.
500 Corporate Woods Parkway, Vernon Hills, IL 60061, U.S.A.
Tel: +1-847-478-2100

Mitsubishi Electric do Brasil Comercio e Servicos Ltda.
Avenida Adelino Cardana, 293, 21 andar, Bethaville, Barueri SP, Brazil
Tel: +55-11-4689-3000

Mitsubishi Electric Automation, Inc. Mexico Branch
Boulevard Miguel de Cervantes Saavedra 301, Torre Norte Piso 5, Ampliacion Granada,
Miguel Hidalgo, Ciudad de Mexico, Mexico, C.P.11520
Tel: +52-55-3067-7512

Europe

Mitsubishi Electric Europe B.V. German Branch
Mitsubishi-Electric-Platz 1, 40882 Ratingen, Germany
Tel: +49-2102-486-0

Mitsubishi Electric Europe B.V. UK Branch
Travellers Lane, UK-Hatfield, Hertfordshire, AL10 8XB, U.K.
Tel: +44-1707-28-8780

Mitsubishi Electric Europe B.V. Italian Branch
Centro Direzionale Colleoni - Palazzo Sirio, Viale Colleoni 7, 20864 Agrate Brianza (MB), Italy
Tel: +39-039-60531

Mitsubishi Electric Europe B.V. Spanish Branch
Carretera de Rubi, 76-80-Apdo. 420, E-08190 Sant Cugat del Valles (Barcelona), Spain
Tel: +34-935-65-3131

Mitsubishi Electric Europe B.V. French Branch
25, Boulevard des Bouvets, 92741 Nanterre Cedex, France
Tel: +33-1-55-68-55-68

Mitsubishi Electric Europe B.V. Czech Branch
Pekarska 621/7, 155 00 Praha 5, Czech Republic
Tel: +420-255 719 200

Mitsubishi Electric Turkey A.S. Umraniye Branch
Serifali Mahallesi Nutuk Sokak No:5, TR-34775 Umraniye / Istanbul, Turkey
Tel: +90-216-526-3990

Mitsubishi Electric Europe B.V. Polish Branch
ul. Krakowska 48, 32-083 Balice, Poland
Tel: +48-12-347-65-00

Africa

Adroit Technologies
20 Waterford Office Park, 189 Witkoppen Road, Fourways, South Africa
Tel: +27-11-658-8100

Asia-Pacific

Mitsubishi Electric Automation (China) Ltd.
Mitsubishi Electric Automation Center, No.1386 Hongqiao Road, Shanghai, China
Tel: +86-21-2322-3030

SETSUYO ENTERPRISE CO., LTD.
6F, No.105, Wugong 3rd Road, Wugu District, New Taipei City 24889, Taiwan
Tel: +886-2-2299-2499

Mitsubishi Electric Automation Korea Co., Ltd.
7F to 9F, Gangseo Hangang Xi-tower A, 401, Yangcheon-ro, Gangseo-Gu, Seoul 07528, Korea
Tel: +82-2-3660-9569

Mitsubishi Electric Asia Pte. Ltd.
307 Alexandra Road, Mitsubishi Electric Building, Singapore 159943
Tel: +65-6473-2308

Mitsubishi Electric Factory Automation (Thailand) Co., Ltd.
12th Floor, SV.City Building, Office Tower 1, No. 896/19 and 20 Rama 3 Road,
Kwaeng Bangpongpang, Khet Yannawa, Bangkok 10120, Thailand
Tel: +66-2682-6522 to 31

PT. Mitsubishi Electric Indonesia
Gedung Jaya 8th Floor, JL. MH. Thamrin No.12, Jakarta Pusat 10340, Indonesia
Tel: +62-21 3192-6461

Mitsubishi Electric Vietnam Company Limited
11th & 12th Floor, Viettel Tower B, 285 Cach Mang Thang 8 Street, Ward 12, District 10,
Ho Chi Minh City, Vietnam.
Tel: +84-28-3910-5945

Mitsubishi Electric India Pvt. Ltd. Pune Branch
Emerald House, EL-3, J Block, M.I.D.C., Bhosari, Pune - 411026, Maharashtra, India
Tel: +91-20-2710-2000

MITSUBISHI ELECTRIC AUSTRALIA PTY. LTD.
348 Victoria Road, P.O. Box 11, Rydalmere, N.S.W 2116, Australia
Tel: +61-2-9684-7777

MITSUBISHI ELECTRIC CORPORATION

HEAD OFFICE: TOKYO BLDG., 2-7-3, MARUNOUCHI, CHIYODA-KU, TOKYO 100-8310, JAPAN
NAGOYA WORKS: 1-14, YADA-MINAMI 5-CHOME, HIGASHI-KU, NAGOYA 461-8670, JAPAN

When exported from Japan, this manual does not require application to the Ministry of Economy, Trade and Industry for service transaction permission.

Specifications subject to change without notice.
Printed in Japan, December 2025.