Space-saving Signal Conditioners M3-UNIT Series

UNIVERSAL TRANSMITTER

(field- and PC-configurable)

Model: M3LU2

OPERATING MANUAL

MG CO., LTD. www.mgco.jp
5-2-55 Minamitsumori, Nishinari-ku, Osaka 557-0063 JAPAN

CONTENTS

1. INTRODUCTION 4

1.1 PACKAGE 4

2. SAFETY PRECAUTIONS (that must be observed) 5

3. POINTS OF CAUTION 7

3.1 BEFORE USE 7

3.2 CONFORMITY WITH EU DIRECTIVES 7

3.3 ENVIRONMENT 7

3.4 WIRING 8

3.5 HANDLING CAUTIONS 8

4. FEATURES AND PREPARATION PROCEDURE OF M3LU2 9

4.1 FEATURES OF M3LU2 9

4.2 PREPARATION PROCEDURE 9

5. COMPONENT IDENTIFICATION 10

5.1 FRONT AND SIDE VIEWS 10

5.1.1 STATUS INDICATOR LED 11

5.2 INTERNAL VIEW 13

6. HOW TO OPEN THE COVER 14

7. DIP SWITCH CONFIGURATION 15

7.1 DIFFERENCE BETWEEN DIP SW CONFIGURATION AND PC CONFIGURATION 15

7.2 DIP SWITCH SELECTION PER I/O SPECIFICATION AND FUNCTION 15

7.2.1 CONFIGURATION MODE 16

7.2.2 INPUT TYPE (JP2) 16

7.2.3 INPUT (DIP SWITCHES) 16

7.2.4 OUTPUT TYPE 20

7.2.5 FRONT CONTROL BUTTON LOCK 20

8. WIRING 21

8.1 CAUTION IN WIRING 21

8.2 WIRING INSTRUCTIONS 21

8.3 TERMINAL ASSIGNMENT 23

8.4 TERMINAL CONNECTIONS 24

8.4.1 WIRING INPUT 24

8.4.2 WIRING OUTPUT 26

8.4.3 WIRING POWER 26

9. INSTALLATION 27

10. CALIBRATION 28

10.1 CALIBRATION FLOW 28

10.2 INPUT & OUTPUT RANGING 29

10.2.1 OUTLINE OF I/O RANGING.....29

10.2.2 MAXIMUM RANGE, MINIMUM SPAN AND DEFAULT VALUE OF INPUT 31

10.2.3 MAXIMUM RANGE, MINIMUM SPAN AND DEFAULT VALUE OF OUTPUT 32

10.2.4 OPERATION PROCEDURE OF I/O RANGING.....33

10.3 FINE ADJUSTMENT MODE 36

10.3.1 OUTLINE OF FINE ADJUSTMENT 36

10.3.2 OPERATION PROCEDURE OF FINE ADJUSTMENT 37

11. CHECKING, MAINTENANCE, INITIALIZATION OF PARAMETERS .39

11.1 CHECKING.....39

11.2 MAINTENANCE 39

11.3 INITIALIZATION OF PARAMETERS 39

12. APPENDICES 40

12.1 SPECIFICATIONS 40

12.1.1 GENERAL SPECIFICATIONS.....40

12.1.2 INPUT SPECIFICATIONS 40

12.1.3 OUTPUT SPECIFICATIONS 41

12.1.4 INSTALLATION.....41

12.1.5 PERFORMANCE 41

12.1.6 STANDARDS & APPROVALS 42

12.1.7 I/O TYPE, MAXIMUM RANGE & ACCURACY 42

12.1.8 CALCULATION EXAMPLES OF OVERALL ACCURACY 44

12.2 PC CONFIGURATOR SOFTWARE.....45

12.3 MODEL NUMBERING 46

12.4 EXTERNAL DIMENSIONS.....47

1. INTRODUCTION

Thank you for your choosing us. Read this manual carefully to ensure that you use the product correctly and safely.

1.1 PACKAGE

Check contents of the package you received as outlined below.

• Signal conditioner

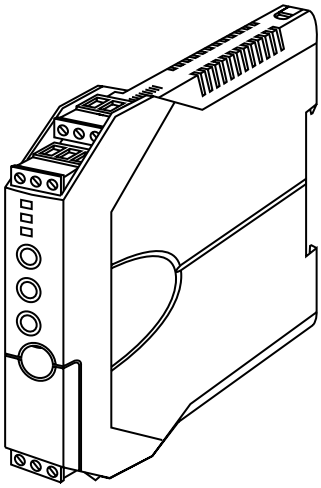

• Accessories

I/O range and tag name label sheet	Instruction manual	CJC sensor
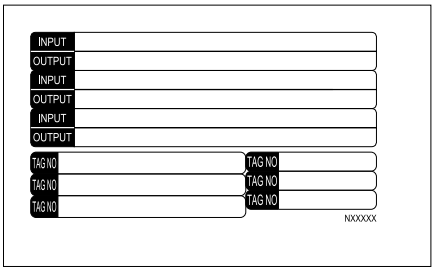	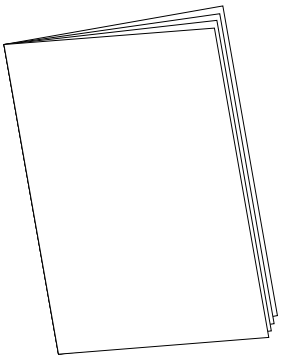	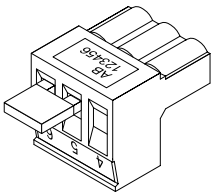 (mounted on a Euro type connector terminal block)

*1 Ordering Information Sheet is included when input or output is speci ed in ordering.

2. SAFETY PRECAUTIONS (that must be observed)

The following signs are used in this manual to provide precautions required to ensure safe usage of the unit. Please understand these signs and graphic symbols, read the manual carefully and observe the description.

The following signs show seriousness of safety hazard or damage occurred when used wrongly with the signs ignored.

⚠ WARNING	Indicates a potentially hazardous situation which, if not avoided, may result in serious injury or death.
⚠ CAUTION	Indicates a potentially hazardous situation which, if not avoided, may result in injury or in property damage.

⃠	Indicates prohibitions.	●	Indicates mandatory cautions.	△	Indicates cautions.

⚠ WARNING

CAUTION

For safety, make sure that wiring is performed by quali ed personnel only.
- Failure to do so may result in a re, electric shock or injury.

CAUTION ELECTRIC SHOCK

Do not touch the terminals while the power is on.
- Doing so may result in electric shock.

MANDATORY CAUTION

Check the connection diagram carefully before wire connection.
- Failure to do so may result in malfunction, a re or electric shock.

MANDATORY CAUTION

Tighten the terminal screws of the Euro type connector terminal blocks with a speci ed torque.
- Excessive fastening may result in damage of the screws and loose screws may occasionally result in ignition.

PROHIBITION WET HANDS

Do not operate buttons with a wet hand or nger.
- Doing so may result in electric shock.

PROHIBITION TO BE WET

Do not splash water on the unit.
- Doing so may result in a re, electric shock or injury.

MANDATORY CAUTION

Provide safety measures outside of the unit to ensure safety in the whole system if an abnormality occurs due to malfunction of the unit or another external factor affecting the unit's operation.

MANDATORY CAUTION

Stop using the unit immediately if smokes, unusual smell or abnormal noises come(s) from it.
- Using the unit continuously may result in a re or electric shock.

MANDATORY CAUTION

Stop using the unit if it is dropped or damaged.
- Using the unit continuously may result in a re or electric shock.

PROHIBITION

Do not throw the unit into the re.
- Doing so may result in rupture of the electronic component.

⚠ CAUTION

PROHIBITION TO DISCOMPOSE

Never discompose or remodel the unit.
- Doing so may result in electric shock, malfunction or injury.

PROHIBITION

Do not connect or remove the unit while its power is on.
- Doing so may result in electric shock, malfunction or injury.

MANDATORY CAUTION

Do not allow ne shavings or wire scraps to enter the unit in machining screws or wiring.
- Doing so may result in malfunction of the unit.

PROHIBITION

Do not open the housing cover while the power or the input is applied.
- Doing so may result in electric shock, malfunction or injury.

PROHIBITION TO CONTACT

Do not touch the printed circuit board or the electronic components in opening the cover.
- Doing so may result in malfunction of the unit.

PROHIBITION

Do not connect other cables to the COMM (con- gurator jack) port than the dedicated one.
- Doing so may result in malfunction of the unit.

MANDATORY CAUTION

Use a minus screwdriver and tweezers in setting the switches.
- Failure to do so may result in malfunction of the unit.

PROHIBITION

Do not press buttons with a pointed object.
- Doing so may result in malfunction of the unit.

PROHIBITION

Do not pull the wires to separate the Euro type connector terminal blocks from the body.
- Doing so may result in damage of the unit or injury.

PROHIBITION

Do not use the unit with the cover open.
- Doing so may result in malfunction of the unit.

PROHIBITION

Do not pull the wires connecting to the unit.
- Doing so may result in electric shock, damage of the unit or injury.

PROHIBITION

Do not use the unit in the atmosphere where combustible gas is present.
- Doing so may result in in ammation, ignition or smoke.

PROHIBITION

Do not cover the ventilation slits with cables, etc.
- Doing so may result in malfunction or heating.

3. POINTS OF CAUTION

3.1 BEFORE USE ....

The unit is for use in general industrial environments, therefore may not be suitable for applications which require higher level of safety (e.g. safety or accident prevention systems) or of reliability (e.g. vehicle control or combustion control systems).
For safety, installation and maintenance of this unit must be conducted by quali ed personnel.

⚠ CAUTION

If the unit is used in a manner not speci ed by this manual, the protection provided by the equipment may be impaired.

3.2 CONFORMITY WITH EU DIRECTIVES

- This equipment is suitable for Pollution Degree 2 and Installation Category II (transient voltage 2500 V). Reinforced insulation (signal input or output to power input: 300 V) and basic insulation (signal input to output: 300 V) are maintained. Prior to installation, check that the insulation class of this unit satis es the system requirements.
- Altitude up to 2000 meters.
- The equipment must be mounted inside a panel.
- The equipment must be installed such that appropriate clearance and creepage distances are maintained to conform to CE requirements. Failure to observe these requirements may invalidate the CE conformance.
- The actual installation environments such as panel con gurations, connected devices, connected wires, may affect the protection level of this unit when it is integrated in a panel system. The user may have to review the CE requirements in regard to the whole system and employ additional protective measures* to ensure the CE conformity.

* For example, installation of noise lters and clamp lters for the power source, input and output connected to the unit, etc.

- Install lightning surge protectors for those wires connected to remote locations.

⚠ CAUTION

This product conforms to the EMC Directive for electrical and electronic apparatus intended for use in industrial environments. If it is used in the residential environments, it may cause radio interference, and the user is requested to take appropriate measures.

3.3 ENVIRONMENT

Install the unit within the installation speci cations.

- Indoors use.
- Environmental temperature must be within -25 to +60°C (-13 to 140°F) with relative humidity within 30 to 95% RH without condensing.
- Altitude up to 2000 meters.
- Provide sufficient space around the unit for heat dissipation.
- Install the unit in a well-ventilated place in order to prevent internal temperature rise.
- Refer to “Clustered mounting” to install several units. In mounting the unit with other equipment side by side, provide sufficient space between them, according to the dimensions in the clustered mounting.
- Do not use the unit under the following environments:
  - Where the unit is exposed to direct sunlight, rain or wind. (The unit is not designed for outdoor use.)
  - Where condensation may occur due to extreme temperature changes.
  - Where corrosive or ammable gas is present.
  - Where heavy dust, iron powder or salt is present in the air.
  - Where organic solvent such like benzine, thinner, and alcohol, or strong alkaline materials such like ammonia and caustic soda may attach to the unit, or where such materials are present in the air.
  - Where the unit is subject to continuous vibration or physical impact.
  - Where there are high-voltage lines, high-voltage equipment, power lines, power equipment, equipment with transmission unit such like a ham radio equipment, or equipment generating large switching surges around the unit.

3.4 WIRING

- In order to prevent potential electric shock, wire the unit after turning off the power supply and making sure that the power is not supplied to the cable.
- Be sure to con rm the name and polarity of each terminal before wiring to the Euro type connector terminal blocks.
- Do not connect anything to unused terminals.

3.5 HANDLING CAUTIONS

- The unit is designed to function as soon as power is supplied, however, a warm up for 10 minutes is required for satisfying complete performance described in the data sheet.
- Use the unit within the noted supply power voltage and rated load.
- The last measured values are held in mode transition. Take this into consideration when con guring the control system.
- Clean the surface of the unit with wet soft cloth. Do not use organic solvent such like benzine, thinner and alcohol. Doing so may result in deformation or discoloration of the unit.
- When abnormality is found such like smokes, unusual smell and abnormal noises coming from the unit, immediately cut the power supply and stop using it.

4. FEATURES AND PREPARATION PROCEDURE OF M3LU2

4.1 FEATURES OF M3LU2

The M3LU2 is a eld con gurable signal transmitter using a simulator and an indicator, without a PC or a dedicated setting unit.
For instance, select an input type and range with the DIP switches on the unit to set input. Then apply a desired minimum or maximum input from the simulator and press a front button to memorize the value as minimum or maximum value. Easy and reasonable one-step calibration (hereafter called ‘One-Step Cal’) realizes automatic I/O ranging and calibration only by pressing a button once.

4.2 PREPARATION PROCEDURE

Before using the unit, perform the calibration according the following ow. The procedure depends on the con guration options or modes.

- Two con guration modes are available with the model M3LU2-x/A, eld con guration using the DIP SW / control buttons (hereafter called ‘DIP SW con guration’) and the PC con guration.
- The model M3LU2-x/B is for the DIP SW con guration only.

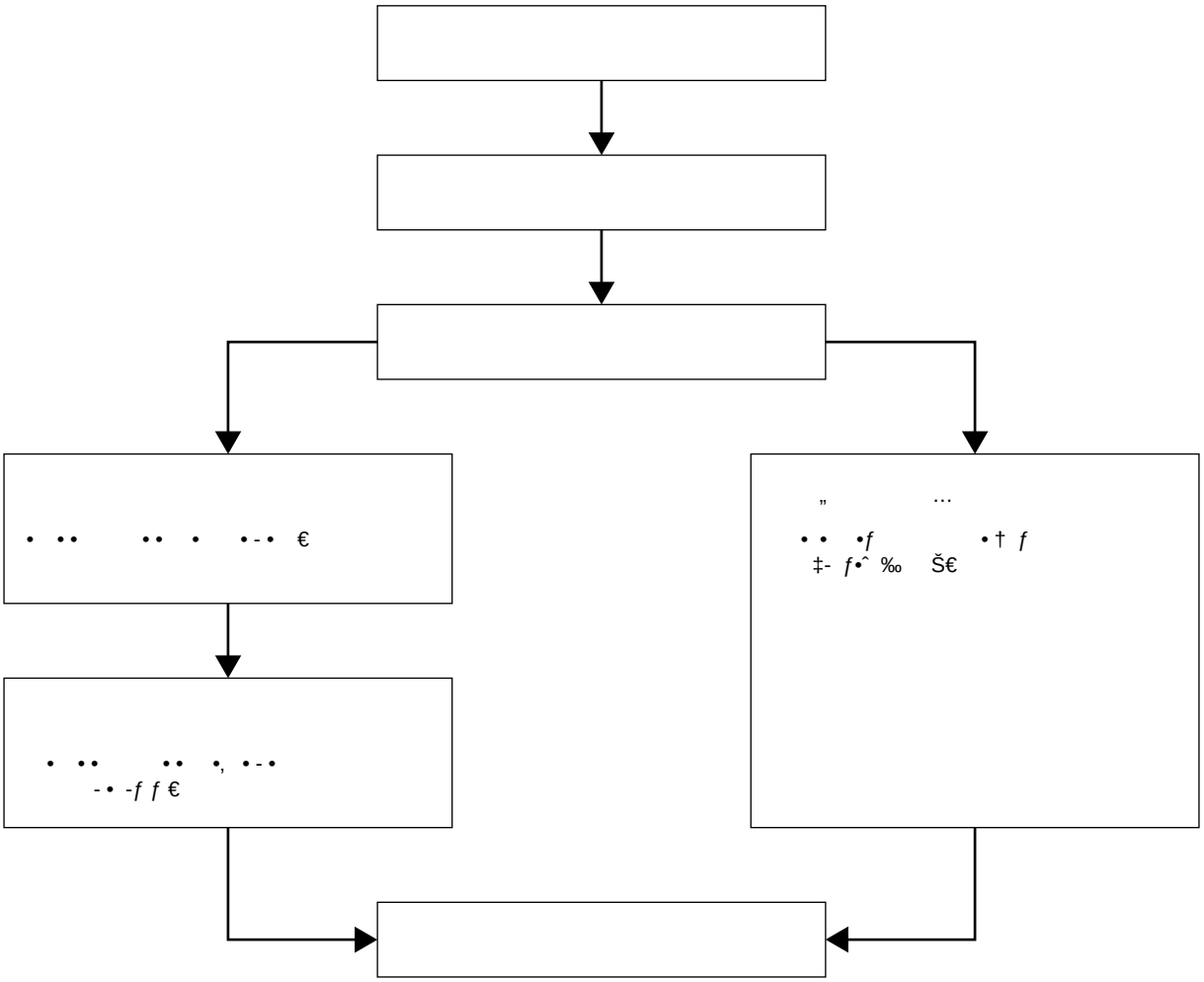

MG CO., LTD. www.mgco.jp
5-2-55 Minamitsumori, Nishinari-ku, Osaka 557-0063 JAPAN

5. COMPONENT IDENTIFICATION

5.1 FRONT AND SIDE VIEWS

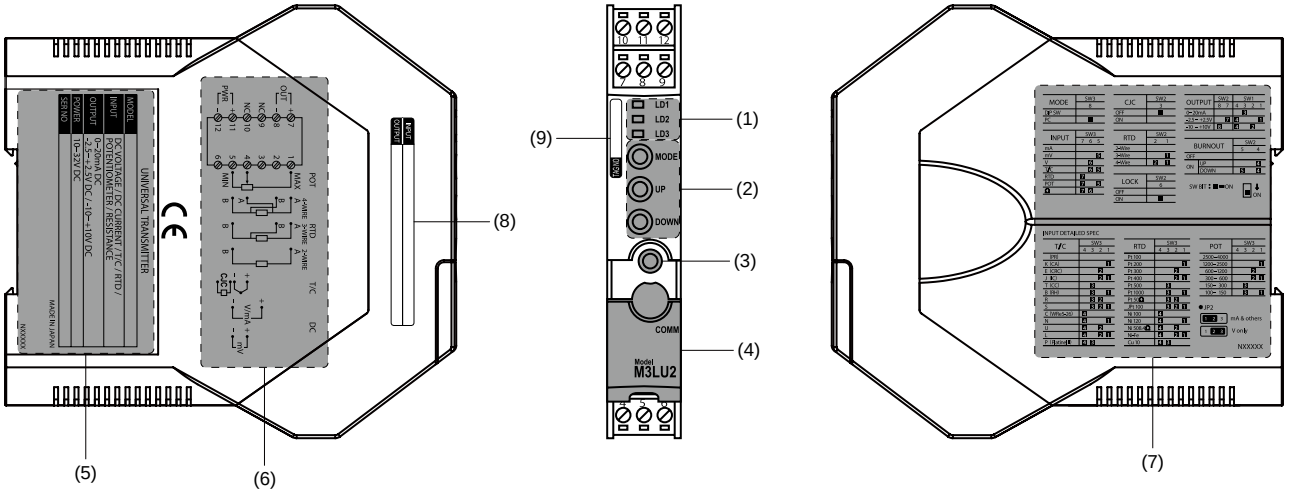

(1) LED1 (LD1), LED2 (LD2) and LED3 (LD3)
The blinking pattern (ON/blink/OFF) of the tri-color (green/amber/red) LEDs indicates a mode or an operation status of the transmitter.

(2) MODE, UP and DOWN Buttons
Used for the I/O ranging and ne adjustments by 'One-Step Cal', and for reset of the parameters to the default status.
The functions of the buttons are shown in the following table.

BUTTON	FUNCTION
MODE	Used to move on to the I/O Ranging Mode, Fine Adjustment Mode and RUN Mode, and to reset the parameters to the default status.
UP	Used to con gure 100% input in the Input Ranging Mode and 100% output in the Output Ranging Mode, and to increase the output in the Fine Adjustment Mode.
DOWN	Used to con gure 0% input in the Input Ranging Mode and 0% output in the Output Ranging Mode, and to decrease the output in the Fine Adjustment Mode.

(3) Con gurator jack
Used to connect with a PC using the PC Con gurator Software (model: M3LUCFG) for various settings, I/O ranging and ne adjustments.
Connect a dedicated cable between the con gurator jack and the PC.

(4) Cover for con gurator jack
Slide the cover to connect the cable to the con gurator jack. Close the cover in the normal operation.

(5) Speci cation label
The model No., power input and serial No. (SER NO) are printed on the label.

(6) Connection diagram
The connection diagram for each terminal is shown.

(7) DIP SW setting
The DIP switch settings are shown.

(8) I/O range label
When I/O range indication is necessary, write in the con gured ranges on the I/O range label included in the product package and put it on the side of the unit.

(9) Tag name label
When a tag No. is speci ed, the unit(s) will be shipped with the tag name label put on the above position.

5.1.1 STATUS INDICATOR LED

Combinations of the three front LEDs (LD1, LD2 and LD3) indicates the transmitter's operating status by different blinking patterns. The patterns depend on the con guration modes, DIP SW con guration and PC con guration.

Examples are shown below.

LED COLOR	
Red	**R**
Amber	**A**
Green	**G**

PATTERN	
ON	■
Blink	▭
OFF	□

NORMAL OPERATION (RUN) MODE

Combination of the LEDs and their blinking patterns indicate normal or abnormal operation of the unit, and are useful to identify error modes.

• Normal operation (RUN) mode

DIP SW CONFIGURATION	PC CONFIGURATION
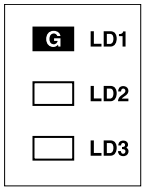	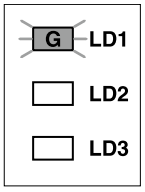

• Error mode

ERROR	DIP SW CONFIGURATION	PC CONFIGURATION
Output saturated	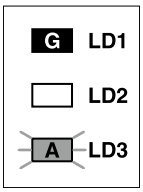	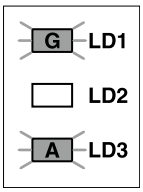
	The output is below -15% or above 115%. Check the setting and input.	
Burnout	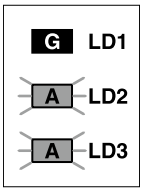	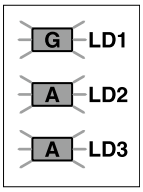
	The sensor or the input wiring is disconnected. Check the sensor and wiring.	
DIP SW error	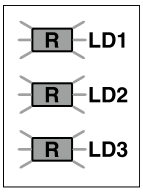	
	DIP SW con guration is inappropriate. Check the SW settings.	
System error	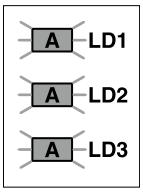	
	Indicates the CPU's communication error.	

I/O RANGING MODE & FINE ADJUSTMENT MODE

The LED status in the I/O ranging and ne adjustments using the ‘One-Step Cal’ is shown in the following tables.

MODE	LED
Input ranging	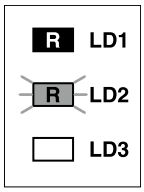
Output ranging	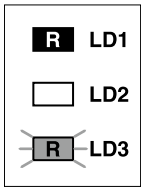

MODE	LED
Fine zero adjustment	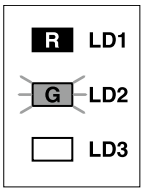
Fine span adjustment	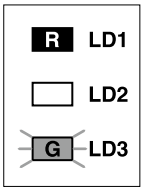

NOTE

In the I/O ranging and ne adjustments using the PC Con gurator Software (model: M3LUCFG), the LEDs are not according to the above tables.

5.2 INTERNAL VIEW

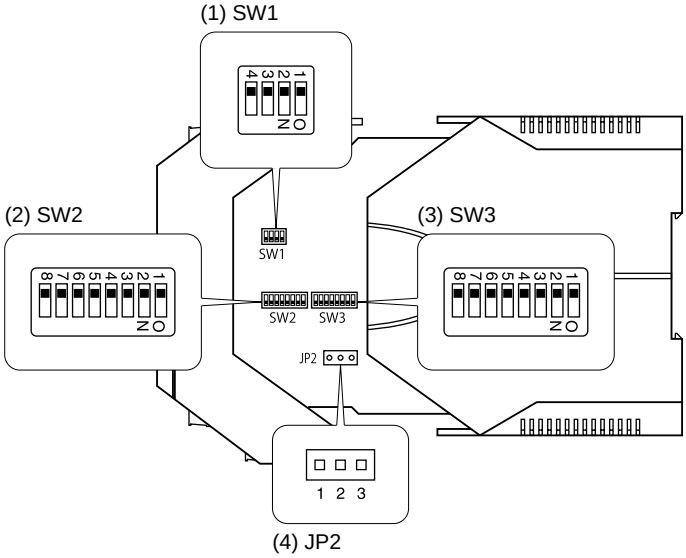

(1) SW1
Sets output type.

(2) SW2
Sets wires, cold junction compensation, burnout, front control button lock and output type.

(3) SW3
Sets input type, sensor type and con guration mode.

(4) JP2
Sets input type.

6. HOW TO OPEN THE COVER

Open the housing cover to set the DIP switches and JP2 inside the cover.

HOW TO OPEN THE COVER

(1) Hold the locks at the top and bottom of the unit.
(2) Slide the housing cover gently to open until it hits the latching inside the unit (approx. 3.5 cm).

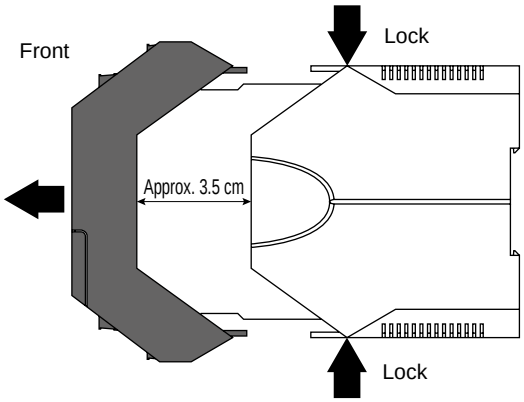

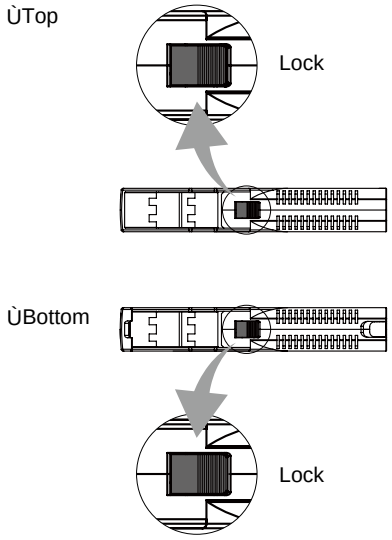

⚠ CAUTION

- Do not open the cover while the power or the input is applied.
- Do not touch the printed circuit board or the electronic components in opening the cover.
- Do not pull beyond where the cover is latched.

HOW TO CLOSE THE COVER

(1) Push the front to close the cover.

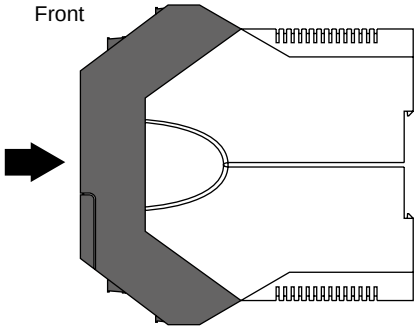

⚠ CAUTION

- Before closing the cover, make sure that there is not a conductive foreign material attached on the printed circuit board.
- Be sure to close the cover after setting.
- Be careful not to get your hand or nger caught in the cover.
- Do not force the cover closed. Doing so may result in damage of the electronic components.

7. DIP SWITCH CONFIGURATION

This chapter describes the con guration of the I/O speci cations and functions using the DIP switches and the JP2.
For the PC con guration, some DIP switch settings are necessary.

7.1 DIFFERENCE BETWEEN DIP SW CONFIGURATION AND PC CONFIGURATION

The following table shows the difference between the DIP SW con guration and PC con guration.

CONFIGURATION ITEM	DIP SW CONFIGURATION	PC CONFIGURATION
Con guration mode	SW3-8 OFF	SW3-8 ON
JP2 for input type	Required	Required
DIP SW for input	Required	----
Output type	Required	Required for SW1-1 through 1-4
Front control button lock	As necessary	As necessary

7.2 DIP SWITCH SELECTION PER I/O SPECIFICATION AND FUNCTION

Con gure the DIP switches and JP2 according to your I/O speci cations and functions.
The unit reads the DIP-switch-calibrated con guration only once after the power supply is turned on. Set the switches with the power supply removed. Some tools are needed to set the DIP switches and JP2.

⚠ CAUTION

- Set the switches and JP2 with the power supply removed.
- Use tweezers or longnose pliers to switch the JP2.
- Use a minus screwdriver with the blade edge 0.8 mm (0.03”) to set the DIP switches.
- Do not touch other electronic components except for the JP2 and DIP switches.

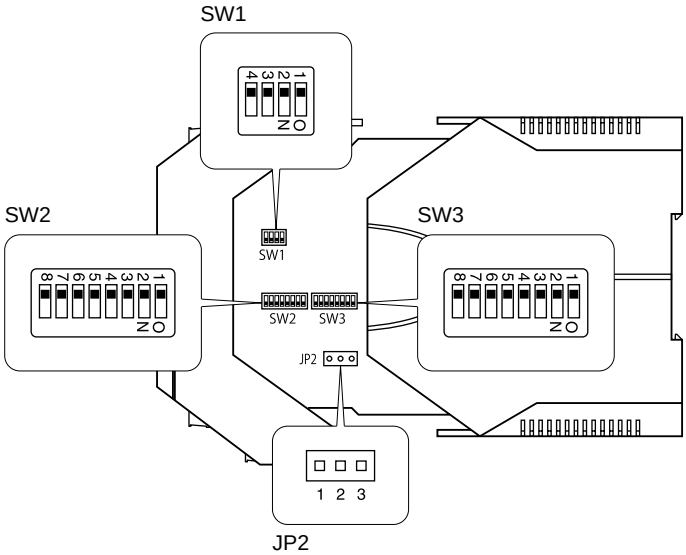

7.2.1 CONFIGURATION MODE

With the model M3LU2-x/A, select the con guration mode (con guration method of I/O speci cations), DIP SW con guration or PC con guration, as shown in the following table. With the model M3LU2-x/B, turn the SW3-8 OFF.

DIP SW con guration: sets I/O speci cations with the DIP switches inside the cover and the front control buttons.
PC con guration: sets I/O speci cations with the PC Con gurator Software (model: M3LUCFG).

MODE	SW3-8
DIP SW	OFF
PC	ON

7.2.2 INPUT TYPE (JP2)

Switch the JP2 jumper according to the input speci cations.
Note that the JP2 setting is required with the PC con guration.

DC VOLTAGE [V] RANGE POSITION [maximum range: -10 to +10 V DC]
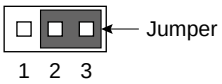
Switch the JP2 jumper to the 2-3 position.

NORMAL POSITION (other than DC voltage [V] range)
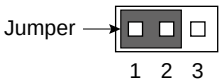
Switch the JP2 jumper to the 1-2 position.

7.2.3 INPUT (DIP SWITCHES)

Set the DIP switches (SW2-1 through 2-5, SW3-1 through 3-7) according to the input speci cations. These settings are not required with the PC con guration.

7.2.3.1 DC current input

SW3-7	SW3-6	SW3-5	SW3-4	SW3-3	SW3-2	SW3-1
OFF	OFF	OFF	OFF	OFF	OFF	OFF

SW2-5	SW2-4	SW2-3	SW2-2	SW2-1
OFF	OFF	OFF	OFF	OFF

7.2.3.2 DC voltage input (mV) [maximum range: -1000 to +1000 mV DC]

SW3-7	SW3-6	SW3-5	SW3-4	SW3-3	SW3-2	SW3-1
OFF	OFF	ON	OFF	OFF	OFF	OFF

SW2-5	SW2-4	SW2-3	SW2-2	SW2-1
Refer to Burnout		OFF	OFF	OFF

• Burnout

BURNOUT	SW2-5	SW2-4
No burnout	OFF	OFF
Upscale	OFF	ON
Downscale	ON	ON

7.2.3.3 DC voltage input (V) [maximum range: -10 to +10 V DC]

SW3-7	SW3-6	SW3-5	SW3-4	SW3-3	SW3-2	SW3-1
OFF	ON	OFF	OFF	OFF	OFF	OFF

SW2-5	SW2-4	SW2-3	SW2-2	SW2-1
OFF	OFF	OFF	OFF	OFF

7.2.3.4 Thermocouple input

SW3-7	SW3-6	SW3-5	SW3-4	SW3-3	SW3-2	SW3-1
OFF	ON	ON	Refer to Thermocouple type			

SW2-5	SW2-4	SW2-3	SW2-2	SW2-1
Refer to Burnout		Refer to Cold junction compensation	OFF	OFF

• Thermocouple type

T/C	SW3-4	SW3-3	SW3-2	SW3-1
(PR)	OFF	OFF	OFF	OFF
K (CA)	OFF	OFF	OFF	ON
E (CRC)	OFF	OFF	ON	OFF
J (IC)	OFF	OFF	ON	ON
T (CC)	OFF	ON	OFF	OFF
B (RH)	OFF	ON	OFF	ON
R	OFF	ON	ON	OFF
S	OFF	ON	ON	ON
C (WRe 5-26)	ON	OFF	OFF	OFF
N	ON	OFF	OFF	ON
U	ON	OFF	ON	OFF
L	ON	OFF	ON	ON
P (Platinel II)	ON	ON	OFF	OFF

• Burnout

BURNOUT	SW2-5	SW2-4
No burnout	OFF	OFF
Upscale	OFF	ON
Downscale	ON	ON

• Cold junction compensation

COLD JUNCTION COMPENSATION	SW2-3
Enable	OFF
Disable	ON

7.2.3.5 RTD input

SW3-7	SW3-6	SW3-5	SW3-4	SW3-3	SW3-2	SW3-1
ON	OFF	OFF	Refer to RTD type			

SW2-5	SW2-4	SW2-3	SW2-2	SW2-1
Refer to Burnout		OFF	Refer to RTD wires	

• RTD type

RTD	SW3-4	SW3-3	SW3-2	SW3-1
Pt 100 (JIS '97, IEC)	OFF	OFF	OFF	OFF
Pt 200	OFF	OFF	OFF	ON
Pt 300	OFF	OFF	ON	OFF
Pt 400	OFF	OFF	ON	ON
Pt 500	OFF	ON	OFF	OFF
Pt 1000	OFF	ON	OFF	ON
Pt 50 (JIS '81)	OFF	ON	ON	OFF
JPt 100 (JIS '89)	OFF	ON	ON	ON
Ni 100	ON	OFF	OFF	OFF
Ni 120	ON	OFF	OFF	ON
Ni 508.4	ON	OFF	ON	OFF
Ni-Fe 604	ON	OFF	ON	ON
Cu 10 @25°C	ON	ON	OFF	OFF

• Burnout

BURNOUT	SW2-5	SW2-4
No burnout	OFF	OFF
Upscale	OFF	ON
Downscale	ON	ON

• RTD wires

WIRES	SW2-2	SW2-1
2-wire	OFF	OFF
3-wire	OFF	ON
4-wire	ON	ON

7.2.3.6 Resistance input

SW3-7	SW3-6	SW3-5	SW3-4	SW3-3	SW3-2	SW3-1
ON	ON	OFF	OFF	OFF	OFF	OFF

SW2-5	SW2-4	SW2-3	SW2-2	SW2-1
Refer to Burnout		OFF	Refer to Resistance wires	

• Burnout

BURNOUT	SW2-5	SW2-4
No burnout	OFF	OFF
Upscale	OFF	ON
Downscale	ON	ON

• Resistance wires

WIRES	SW2-2	SW2-1
2-wire	OFF	OFF
3-wire	OFF	ON
4-wire	ON	ON

7.2.3.7 Potentiometer input

SW3-7	SW3-6	SW3-5	SW3-4	SW3-3	SW3-2	SW3-1
ON	OFF	ON	Refer to Potentiometer (total resistance)			

SW2-5	SW2-4	SW2-3	SW2-2	SW2-1
Refer to Burnout		OFF	OFF	OFF

• Potentiometer (total resistance)

POTENTIOMETER (TOTAL RESISTANCE)	SW3-4	SW3-3	SW3-2	SW3-1
2500 to 4000	OFF	OFF	OFF	OFF
1200 to 2500	OFF	OFF	OFF	ON
600 to 1200	OFF	OFF	ON	OFF
300 to 600	OFF	OFF	ON	ON
150 to 300	OFF	ON	OFF	OFF
80 to 150	OFF	ON	OFF	ON

• Burnout

BURNOUT	SW2-5	SW2-4
No burnout	OFF	OFF
Upscale	OFF	ON
Downscale	ON	ON

7.2.4 OUTPUT TYPE

Set the DIP switches (SW1-1 through 1-4, SW2-7 and 2-8) according to the output speci cations.
The DIP switch settings (SW1-1 through 1-4) are required with the PC con guration.

7.2.4.1 DIP SW configuration

• DC current output

SW1-4	SW1-3	SW1-2	SW1-1
OFF	ON	OFF	OFF

SW2-8	SW2-7
OFF	OFF

• DC voltage output (narrow spans) [maximum range: -2.5 to +2.5 V DC]

SW1-4	SW1-3	SW1-2	SW1-1
ON	OFF	OFF	ON

SW2-8	SW2-7
OFF	ON

• DC voltage output (wide spans) [maximum range: -10 to +10 V DC]

SW1-4	SW1-3	SW1-2	SW1-1
ON	OFF	ON	OFF

SW2-8	SW2-7
ON	OFF

7.2.4.2 PC configuration

• DC current output

SW1-4	SW1-3	SW1-2	SW1-1
OFF	ON	OFF	OFF

• DC voltage output (narrow spans) [maximum range: -2.5 to +2.5 V DC]

SW1-4	SW1-3	SW1-2	SW1-1
ON	OFF	OFF	ON

• DC voltage output (wide spans) [maximum range: -10 to +10 V DC]

SW1-4	SW1-3	SW1-2	SW1-1
ON	OFF	ON	OFF

7.2.5 FRONT CONTROL BUTTON LOCK

You can lock the button operation on the front panel to prevent inadvertent operation.

LOCK	SW2-6
Unlock	OFF
Lock	ON

8. WIRING

8.1 CAUTION IN WIRING

- For safety, make sure that wiring is performed by quali ed personnel only.
- In order to prevent potential electric shock, wire the unit after turning off the power supply and making sure that the power is not supplied to the cable.
- Be sure to con rm the name and polarity of each terminal before wiring to the Euro type connector terminal blocks (hereafter called ‘terminal block(s)’).
- Take measures to reduce noise as much as possible, e.g. by using shielded twisted pair wires for the input signal. Ground the input shield to the most stable earth to prevent noise troubles.
- Do not connect anything to unused terminals.
- We offer a series of lightning surge protectors for protection against induced lightning surges. Please contact us to choose appropriate models.

8.2 WIRING INSTRUCTIONS

APPLICABLE WIRE SIZE

- Solid: 0.25 to 2.5 mm^2 (0.55 to 1.75 dia.)
- Stranded: 0.25 to 2.5 mm^2 (0.55 to 1.75 dia.)

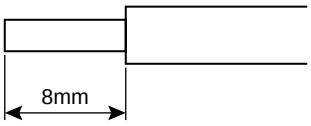

⚠ CAUTION

- Tinning wire ends may cause contact failure and therefore is not recommended.
- Expose wire conductors by 8 mm (0.31”).

RECOMMENDED FERRULE

The following Phoenix Contact terminals are recommended.

- For single-wire

CROSS-SECTION AREA	MODEL
0.2 to 0.25 mm^2	AI 0,25-8 YE
0.25 to 0.34 mm^2	AI 0,34-8 TQ
0.34 to 0.5 mm^2	AI 0,5-8 WH
0.5 to 0.75 mm^2	AI 0,75-8 GY
0.75 to 1.0 mm^2	AI 1,0-8 RD
1.0 to 1.5 mm^2	AI 1,5-8 BK

- For twin-wire

CROSS-SECTION AREA	MODEL
0.34 to 0.5 mm^2	AI-TWIN 2X 0,5-8 WH
0.5 to 0.75 mm^2	AI-TWIN 2X 0,75-8 GY
0.75 to 1.0 mm^2	AI-TWIN 2X 1,0-8 RD
1.0 to 1.5 mm^2	AI-TWIN 2X 1,5-8 BK

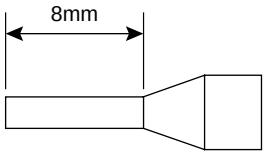

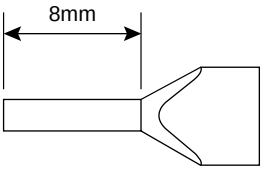

Recommended manufacturer: Phoenix Contact GmbH & Co., KG

INSTALLATION/SEPARATION OF TERMINAL BLOCK

• Separation

Insert a minus screwdriver between the terminal block and the housing body, pull up the driver and pull out the terminal block.

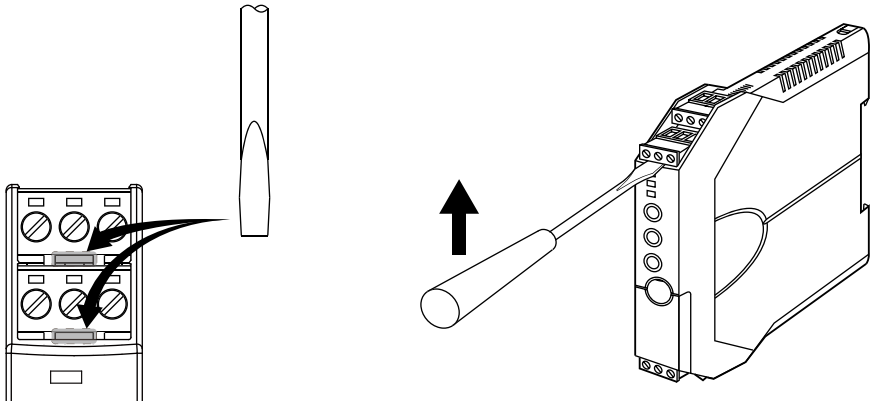

• Installation

Push the terminal block until it clicks into place.

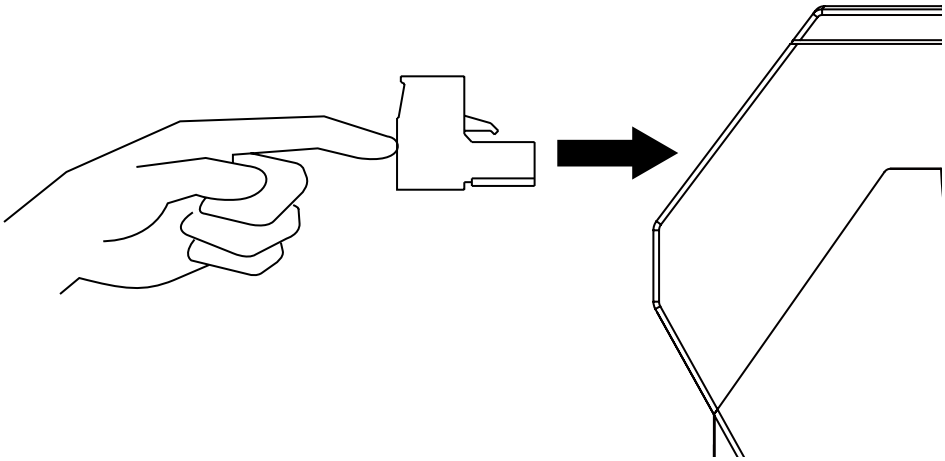

NOTE

Match the terminal numbers of the terminal blocks with those indicated on the transmitter body in installing the blocks (gure on the right).

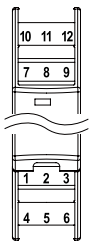

WIRING TO TERMINAL BLOCK

Insert a wire into the dead end of a terminal block and x it with a minus screwdriver with the blade edge 0.6 mm (0.02”) and the blade width 3.5 mm (0.14”) (torque: 0.5 – 0.6 N m).

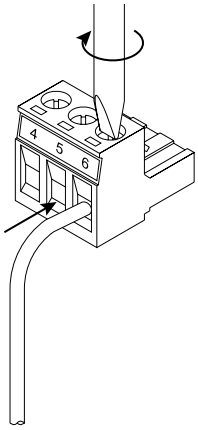

NOTE

- For a thermocouple input, replace the terminal block (4 – 5 – 6) with the one connected with the CJC sensor included in the package. Fasten the input wire and the CJC sensor together on the terminal 5.
- Do not use a ferrule with insulating sleeve.
- Insert a wire under the CJC sensor (gure on the right).

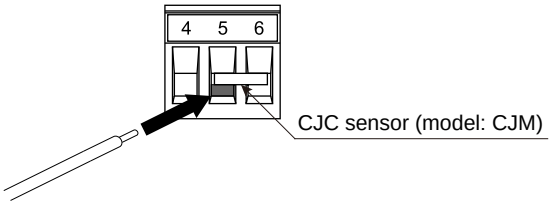

8.3 TERMINAL ASSIGNMENT

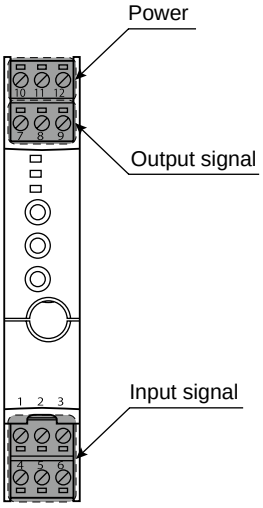

8.4 TERMINAL CONNECTIONS

DC POWERED TYPE

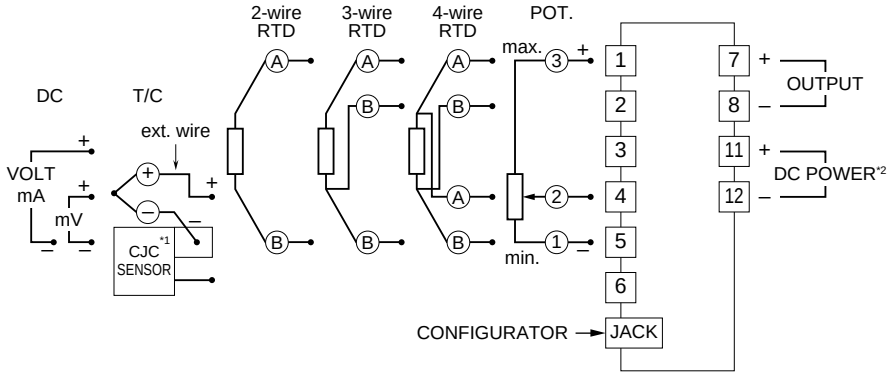

AC POWERED TYPE

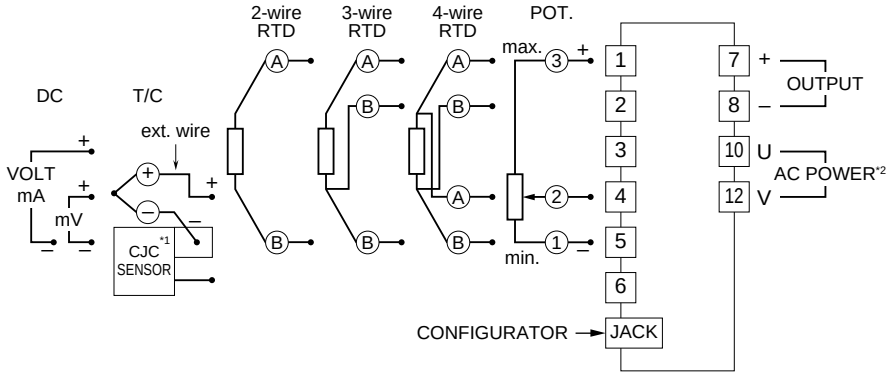

*1 Replace the Euro Type Connector Terminal Block (4 – 5 – 6) with the one connected with the CJC Sensor, included in the package.
The CJC Sensor is secured to the terminal 6.
Loosen only the terminal 4 – 5 and connect the T/C extension wires.
*2 Be aware that the AC power and DC power connect to different terminals.

8.4.1 WIRING INPUT

8.4.1.1 DC voltage/current input

Connect DC voltage or current wires.

DC current input	DC voltage input (V)	DC voltage input (mV)
Maximum range: 0 to 20 mA DC	Maximum range: -10 to +10 V DC	Maximum range: -1000 to +1000 mV DC
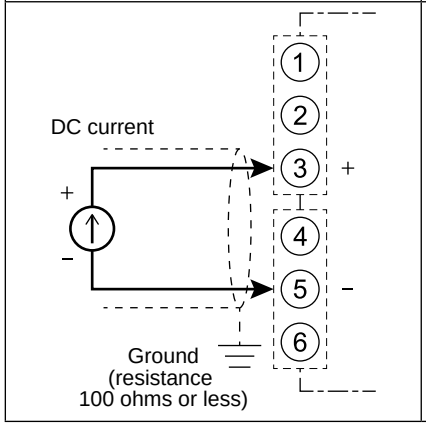	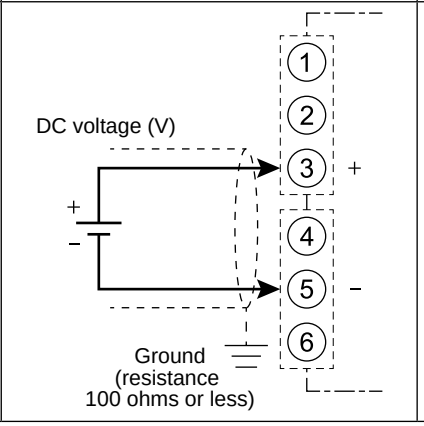	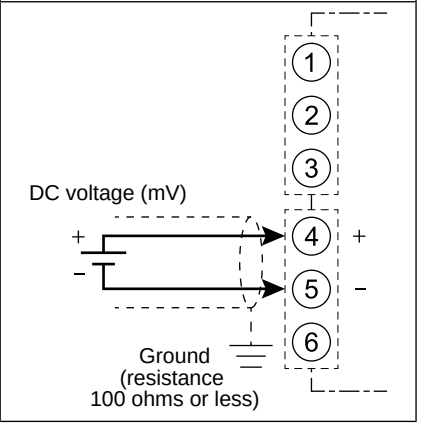

8.4.1.2 Thermocouple input

Connect a thermocouple or extension wires.

Thermocouple input

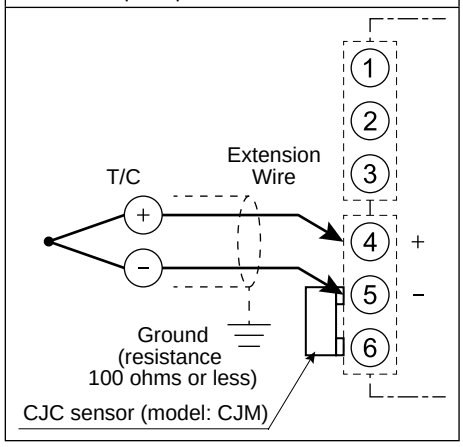

⚠ CAUTION

- Wire the unit with the thermocouple using the extension wires with the same characteristics as the thermocouple.
- The CJC sensor is calibrated to a particular unit and not interchangeable with another. Match the serial No. of the unit and the sensor (gure on the right).
- Be careful not to change the temperature around the terminal block. Take care that wind from a fan does not hit it directly.
- Be careful not to separate the CJC sensor from the terminal block. Do not loosen the screw on the terminal 6. If you did, connect the CJC sensor to the terminals 5 and 6.

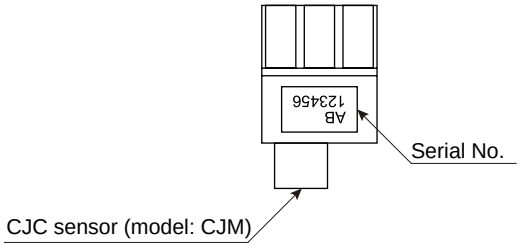

8.4.1.3 RTD/resistance input

Connect a RTD or a resistance. Connect according to the RTD/resistance wires.

RTD/resistance input

2-wire	3-wire	4-wire
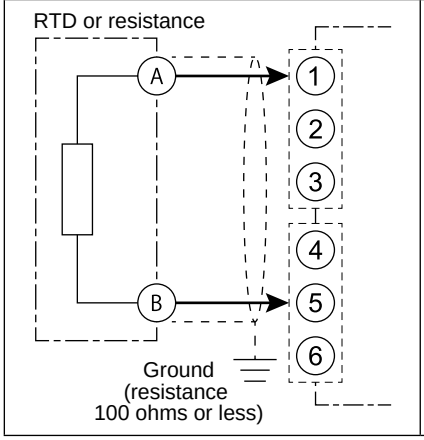	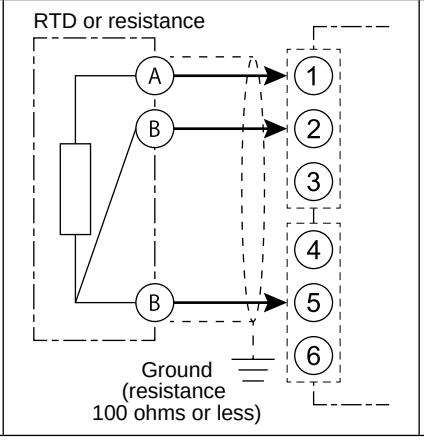	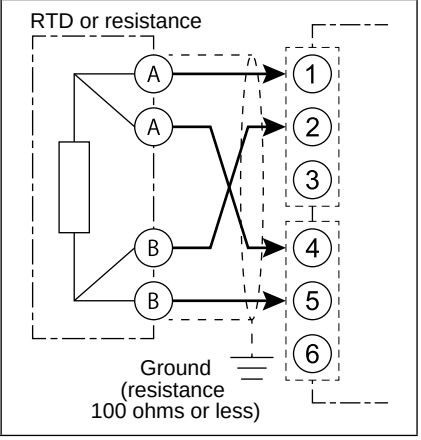

⚠ CAUTION

- The leadwire resistance including internal resistance such like a lightning surge protector and a barrier must be maximum 20 per wire.
- The excitation is 0.3 mA. Use a RTD with excitation 0.3 mA or more.

8.4.1.4 Potentiometer input

Connect a potentiometer.

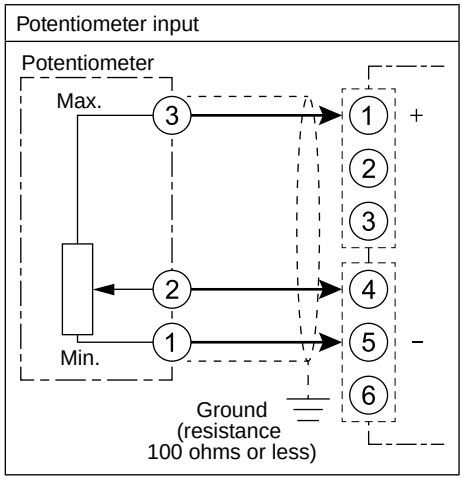

8.4.2 WIRING OUTPUT

Voltage or current output is provided depending on the output setting.

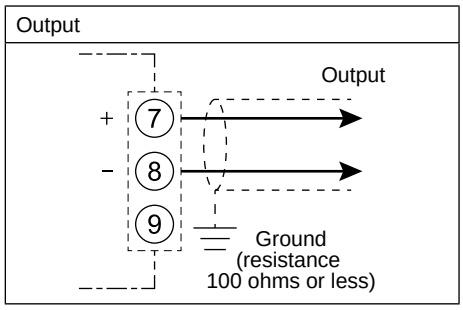

8.4.3 WIRING POWER

Connect power according to the power input code. The power speci cations are shown in the following table.

CODE	RATING	ALLOWABLE RANGE & POWER CONSUMPTION
M2	100 to 240 V AC	85 to 264 V AC, 47 to 66 Hz Approx. 4 VA at 100 V Approx. 5 VA at 200 V Approx. 6 VA at 264 V
R4	10 to 32 V DC	9 to 36 V DC, approx. 3 W

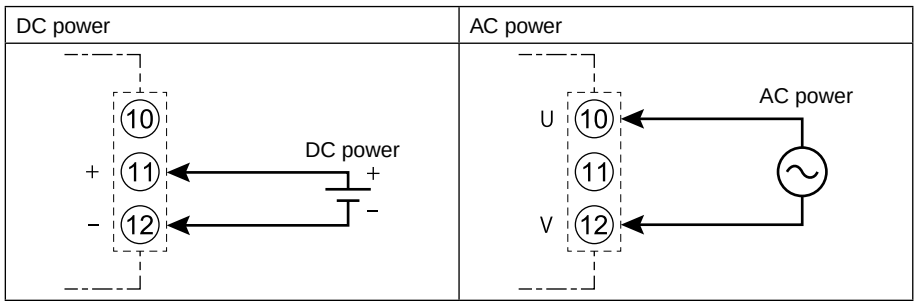

⚠ CAUTION

- Be aware that the AC power and DC power connect to different terminals.
- For DC power, con rm the polarity.

9. INSTALLATION

DIN RAIL MOUNTING

Set the unit so that its DIN rail adaptor is at the bottom. Position the upper hook at the rear side of the unit on the DIN rail and push in the lower.

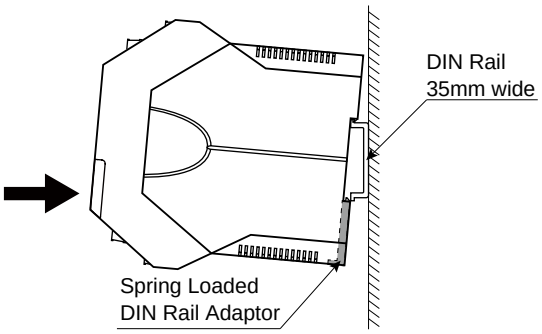

REMOVAL

Push down the DIN rail adaptor utilizing a minus screwdriver and pull.

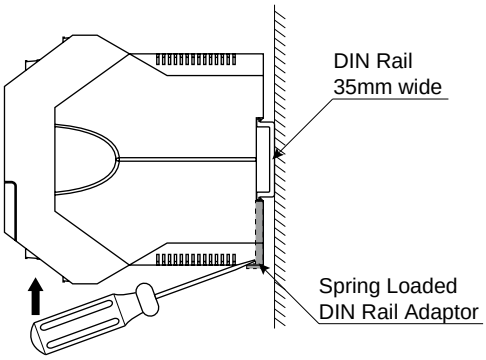

10. CALIBRATION

‘Calibration’ means I/O ranging or output ne adjustments using the front control buttons. The ‘One-Step-Cal’ calibration technique realizes automatic I/O ranging and adjustment.
This chapter describes ow and operation procedure of the calibration.
You can also carry out the calibration using the PC Con gurator Software (model: M3LUCFG). For detailed information, refer to the M3LUCFG users manual.

10.1 CALIBRATION FLOW

The calibration includes I/O Ranging Mode and Fine Adjustment Mode. Hold down the MODE button to shift each mode from the RUN Mode. The mode to shift depends on the time to hold down the button.
The following chart shows the calibration ow.

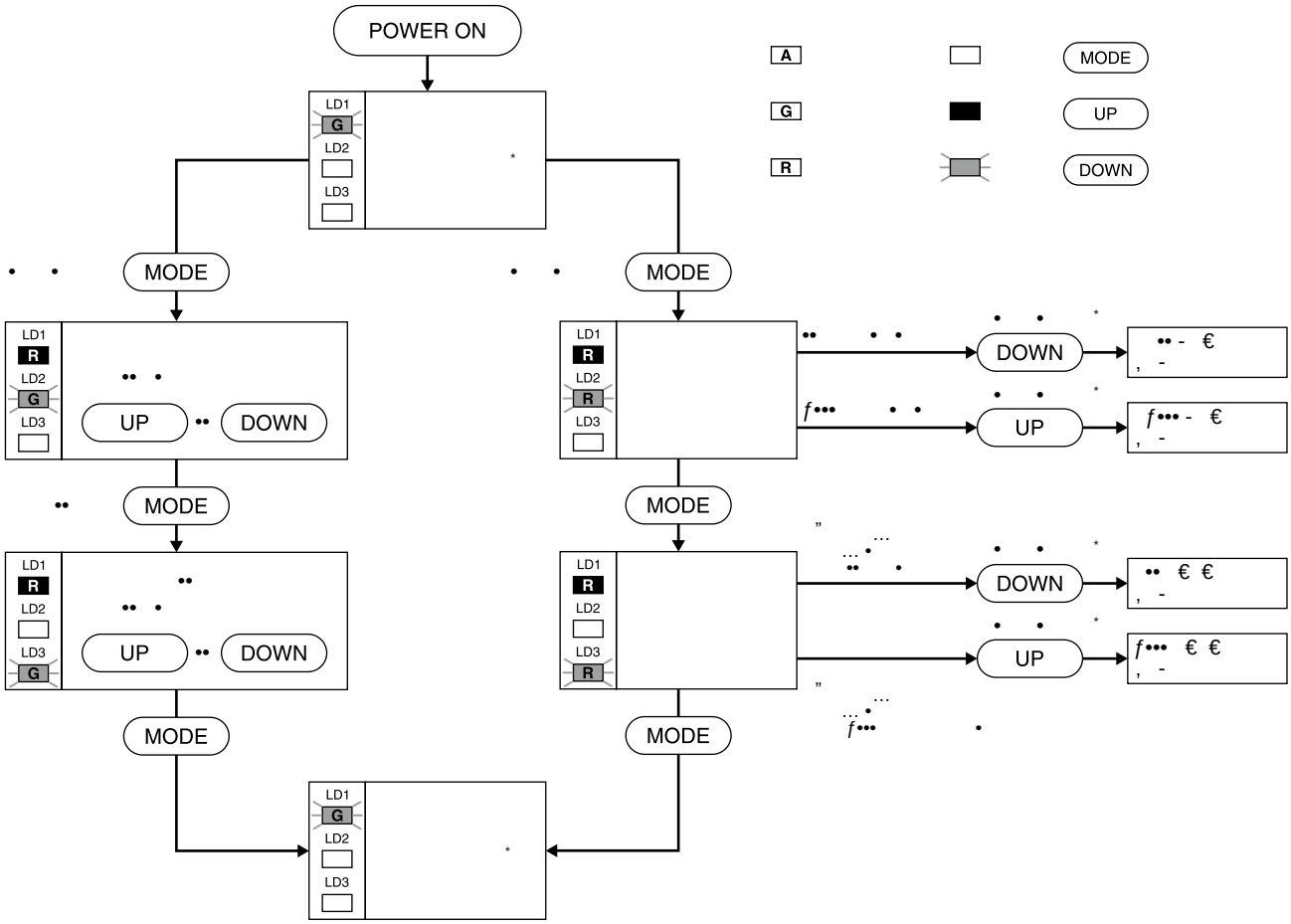

*1 In the RUN Mode, the green LD1 blinks (PC con guration), or turns on (DIP SW con guration).
*2 When you set 0% or 100% input/output ranges, keep pressing UP or DOWN button until the LD1 blinks for approx. 2 seconds and turns off, which indicates the setup is complete. When you release the button, the LD1 is returned to ON. Therefore hold down the button until the LD1 turns OFF.

10.2 INPUT & OUTPUT RANGING

After the DIP switch setting is complete, set up the precise input and output range using the front control buttons. Be sure that the front control button function is enabled with the DIP switch setting (SW2-6 OFF).

10.2.1 OUTLINE OF I/O RANGING

PREPARATION

Mount the DIP-SW-con gured M3LU2 on to a DIN rail.
Connect the M3LU2 to a simulator and a multimeter and to a power source according to the terminal connections.

INPUT RANGING

- In the Input Ranging Mode, apply the desired minimum input level from the simulator and hold down DOWN button until the LD1 blinks and then turns OFF.
- Then apply the desired maximum input level and hold down UP button until the LD1 blinks and then turns OFF.

[Example 1] Setting input to 0 – 5 V DC
Maximum input range: -10 to +10 V DC
0% input ranging: apply 0 V DC and hold down DOWN button
100% input ranging: apply 5 V DC and hold down UP button

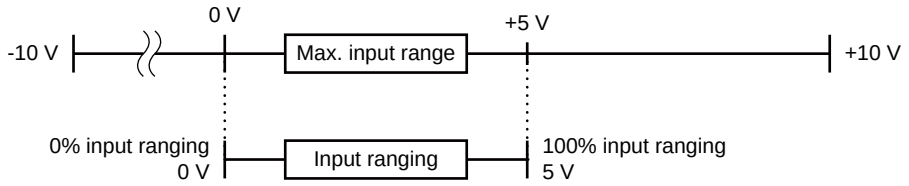

NOTE

- Input ranging is not needed in using the default value.
- 100% input ranging value must be greater than 0% value.
- Set the input within the maximum range with the minimum span or more. With inappropriate input level, the input ranging is not carried out even in holding down UP or DOWN button. (The LD1 does not change.)
- There is no stated order of setting 0% and 100% levels or no limitations of entering values for multiple times within one step of Ranging Mode.
- Signal level is not stored when UP or DOWN button is released before the LD1 turns OFF.

OUTPUT RANGING

- In the Output Ranging Mode, increase or decrease the simulated input until the meter shows the desired minimum output level. Hold down DOWN button until the LD1 blinks and then turns OFF.
- Then increase or decrease the simulated input until the meter shows the desired maximum output level. Hold down UP button until the LD1 blinks and then turns OFF.

[Example 2] Setting output to 0 – 16 mA DC (input 0 – 5 V DC [Example 1])

Maximum output range: 0 – 20 mA DC

0% output ranging: increase or decrease a simulated input until the meter shows 0 mA DC and hold down DOWN button.

100% output ranging: increase or decrease a simulated input until the meter shows 16 mA DC and hold down UP button.

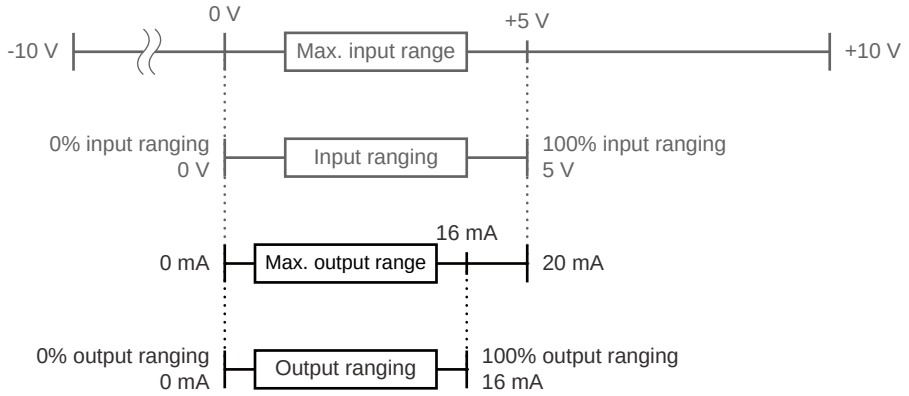

IMPORTANT

- Use a simulator to adjust the desired output.
- A different signal from that in the input ranging may be applied.
- Increase or decrease a simulated input while con rming the output with a multimeter.
- Even if the input ranging is performed after the output ranging, another output ranging is not needed.

NOTE

- Output ranging is not needed in using the default value.
- 100% output ranging value must be greater than 0% value.
- Set the output within the maximum range with the minimum span or more. With inappropriate output level, the output ranging is not carried out even in holding down UP or DOWN button. (The LD1 does not change.)
- There is no stated order of setting 0% and 100% levels or no limitations of entering values for multiple times within one step of the Ranging Mode.
- Signal level is not stored when UP or DOWN button is released before the LD1 turns OFF.

10.2.2 MAXIMUM RANGE, MINIMUM SPAN AND DEFAULT VALUE OF INPUT

The maximum range, minimum span and default value of the input are shown in the following tables. The default value means initial 0% and 100% input when the DIP switch setting is changed.

10.2.2.1 DC current input

MAXIMUM RANGE	MINIMUM SPAN	DEFAULT VALUE
0 to 20 mA DC	1 mA	4 to 20 mA DC

10.2.2.2 DC voltage input (mV)

MAXIMUM RANGE	MINIMUM SPAN	DEFAULT VALUE
-1000 to +1000 mV DC	4 mV	0 to 1000 mV DC

10.2.2.3 DC voltage input (V)

MAXIMUM RANGE	MINIMUM SPAN	DEFAULT VALUE
-10 to +10 V DC	1 V	1 to 5 V DC

10.2.2.4 Thermocouple input

Minimum span: 20°C (36°F)
Default value: same as conformance range in °C

THERMOCOUPLE	°C		°F	
	MAXIMUM RANGE	CONFORMANCE RANGE	MAXIMUM RANGE	CONFORMANCE RANGE
(PR)	0 to 1760	0 to 1760	32 to 3200	32 to 3200
K (CA)	-270 to +1370	-150 to +1370	-454 to +2498	-238 to +2498
E (CRC)	-270 to +1000	-170 to +1000	-454 to +1832	-274 to +1832
J (IC)	-210 to +1200	-180 to +1200	-346 to +2192	-292 to +2192
T (CC)	-270 to +400	-170 to +400	-454 to +752	-274 to +752
B (RH)	100 to 1820	400 to 1760	212 to 3308	752 to 3200
R	-50 to +1760	200 to 1760	-58 to +3200	392 to 3200
S	-50 to +1760	0 to 1760	-58 to +3200	32 to 3200
C (WRe 5-26)	0 to 2315	0 to 2315	32 to 4199	32 to 4199
N	-270 to +1300	-130 to +1300	-454 to +2372	-202 to +2372
U	-200 to +600	-200 to +600	-328 to +1112	-328 to +1112
L	-200 to +900	-200 to +900	-328 to +1652	-328 to +1652
P (Platinel II)	0 to 1395	0 to 1395	32 to 2543	32 to 2543

10.2.2.5 RTD input

Minimum span: 20°C (36°F)
Default value: same as maximum range in °C

RTD	°C	°F
	MAXIMUM RANGE	MAXIMUM RANGE
Pt 100 (JIS '97, IEC)	-200 to +850	-328 to +1562
Pt 200	-200 to +850	-328 to +1562
Pt 300	-200 to +850	-328 to +1562
Pt 400	-200 to +850	-328 to +1562
Pt 500	-200 to +850	-328 to +1562
Pt 1000	-200 to +850	-328 to +1562
Pt 50 (JIS '81)	-200 to +649	-328 to +1200
JPt 100 (JIS '89)	-200 to +510	-328 to +950
Ni 100	-80 to +260	-112 to +500
Ni 120	-80 to +260	-112 to +500
Ni 508.4	-50 to +200	-58 to +392
Ni-Fe 604	-200 to +200	-328 to +392
Cu 10 @25°C	-50 to +250	-58 to +482

10.2.2.6 Resistance input

MAXIMUM RANGE	MINIMUM SPAN	DEFAULT VALUE
0 to 4000	10	0 to 4000

10.2.2.7 Potentiometer input

MAXIMUM RANGE (TOTAL RESISTANCE)	MINIMUM SPAN	DEFAULT VALUE
2500 to 4000	2% of total resistance	0 to 100%
1200 to 2500		
600 to 1200		
300 to 600		
150 to 300		
80 to 150		

10.2.3 MAXIMUM RANGE, MINIMUM SPAN AND DEFAULT VALUE OF OUTPUT

The maximum range, minimum span and default value of the output are shown in the following tables. The default value means initial 0% and 100% output when the DIP switch setting is changed.

10.2.3.1 DC current output

MAXIMUM RANGE	MINIMUM SPAN	DEFAULT VALUE
0 to 20 mA DC	1 mA	4 to 20 mA DC

10.2.3.2 DC voltage output (narrow spans)

MAXIMUM RANGE	MINIMUM SPAN	DEFAULT VALUE
-2.5 to +2.5 V DC	250 mV	0 to 1 V DC

10.2.3.3 DC voltage output (wide spans)

MAXIMUM RANGE	MINIMUM SPAN	DEFAULT VALUE
-10 to +10 V DC	1 V	1 to 5 V DC

10.2.4 OPERATION PROCEDURE OF I/O RANGING

Perform the I/O ranging in the following procedure.

1 **In the RUN Mode, hold down MODE button for 5 seconds or more until the LD1 red LED is ON.**

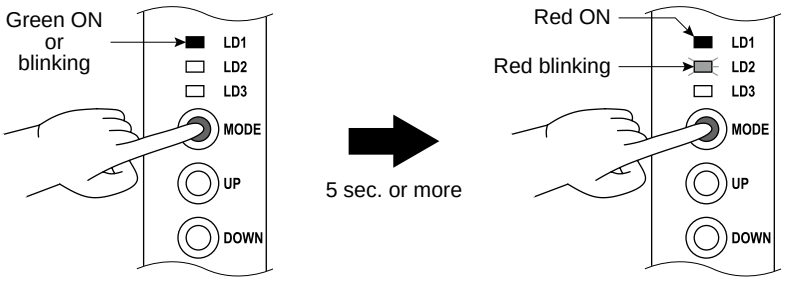

- Con rm that the LD1 green LED is ON (DIP SW con guration) or blinking (PC con guration). Then hold down MODE button for 5 seconds or more until the LD1 red LED is ON.
- The LD2 red LED starts blinking indicating the Input Ranging Mode.

2 **Apply the desired minimum input level and hold down DOWN button until the LD1 turns OFF.**

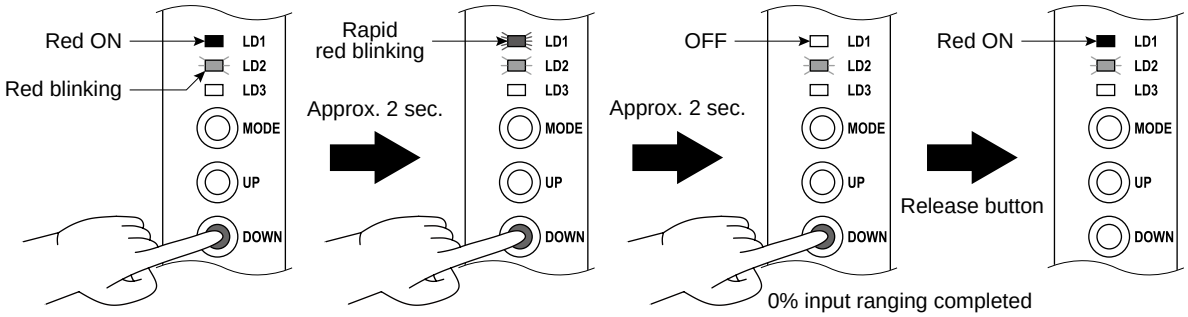

- Hold down DOWN button, and the LD1 red LED blinks in approx. 2 sec. and then turns OFF in approx. 2 sec.
- The LD1 turning OFF means completion of 0% input ranging. Hold down DOWN button until the LD1 turns OFF.
- Skip to the next procedure when 0% input ranging is not necessary.

3 **Apply the desired maximum input level and hold down UP button until the LD1 turns OFF.**

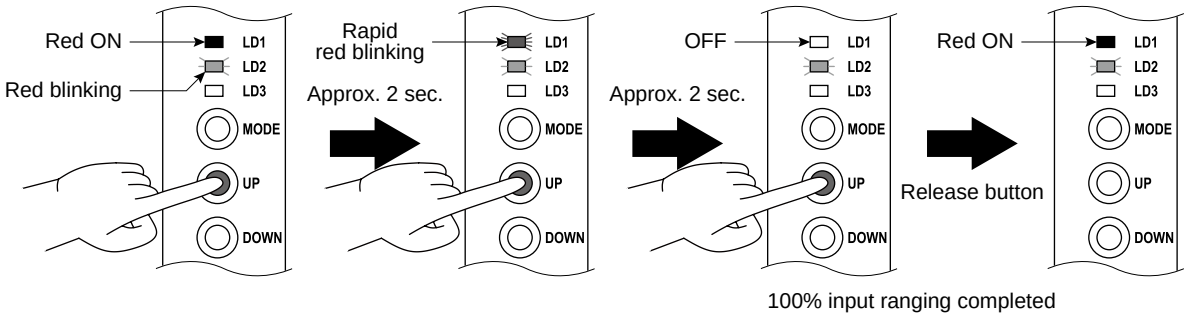

- Hold down UP button, and the LD1 red LED blinks in approx. 2 sec. and then turns OFF in approx. 2 sec.
- The LD1 turning OFF means completion of 100% input ranging. Hold down UP button until the LD1 turns OFF.
- Skip to the next procedure when 100% input ranging is not necessary.

4 Press MODE button to go on to the Output Ranging Mode.

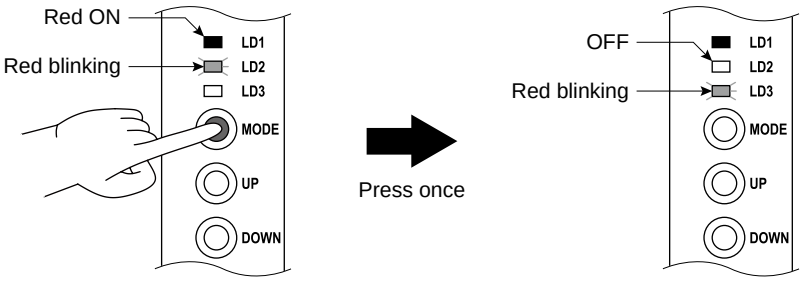

- Press MODE button once to go on to the Output Ranging Mode.
- The LD2 turns OFF and the LD3 red LED starts blinking indicating the Output Ranging Mode.
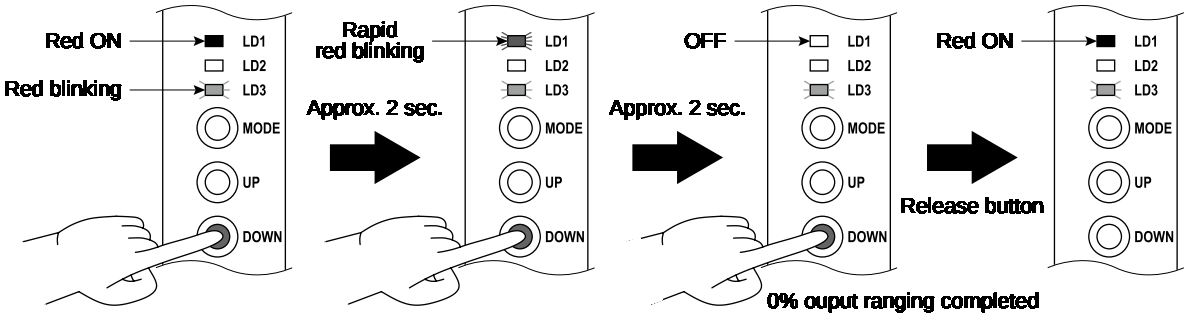
5 Increase or decrease the simulated input until the meter shows the desired minimum output level. Hold down DOWN button until the LD1 turns OFF.