UNIVERSAL TRANSMITTER

MODEL **JUA**

BEFORE USE ....

Thank you for choosing M-System. Before use, please check contents of the package you received as outlined below.
If you have any problems or questions with the product, please contact M-System's Sales Office or representatives.

■ PACKAGE INCLUDES:

Signal conditioner (body + base socket + CJC sensor).....(1)

■ MODEL NO.

Confirm Model No. marking on the product to be exactly what you ordered.

■ INSTRUCTION MANUAL

This manual describes necessary points of caution when you use this product, including installation and connection, hardware setting, and basic maintenance procedures.
When you need to change software settings, please refer to the Operation Manual for Model PU-2x (EM-9255), Section A.
The JUA is programmable either by using the front control buttons or the PC Configurator Software. For detailed information on the PC configuration, refer to the JXCON users manual.
Software and manuals are downloadable at M-System's web site: http://www.m-system.co.jp

POINTS OF CAUTION

■ CONFORMITY WITH EU DIRECTIVES

- This equipment is suitable for Pollution Degree 2, Measurement Category II (alarm output, transient voltage 2500V) and Installation Category II (transient voltage 2500V). Reinforced insulation (signal input or DC output or alarm output to power input: 300V) and basic insulation (signal input to DC output to alarm output: 300V) are maintained. Prior to installation, check that the insulation class of this unit satisfies the system requirements. The alarm output of this equipment is suitable for use in Measurement Category II with the maximum switching voltage 150V, or in Measurement Category I with the maximum switching voltage of 300V.
- Altitude up to 2000 meters.
- The equipment must be mounted inside a panel.
- Insert noise filters for the I/O, alarm output and power source connected to the unit. TDK-Lambda Model RSAN-2006, TDK Model ZCAT3035-1330 or equivalent is recommended.
- Use shielded wires for those connected to the unit (power input, signal input, DC output, alarm output).
- The equipment must be installed such that appropriate clearance and creepage distances are maintained to conform to CE requirements. Failure to observe these requirements may invalidate the CE conformance.
- The actual installation environments such as panel configurations, connected devices, connected wires, may affect the protection level of this unit when it is integrated in a panel system. The user may have to review the CE requirements in regard to the whole system and employ additional protective measures to ensure the CE conformity.
- Install lightning surge protectors for those wires connected to remote locations.

■ POWER INPUT RATING & OPERATIONAL RANGE

- Locate the power input rating marked on the product and confirm its operational range as indicated below:
  AC power: Rating ±10%, 50/60±2 Hz, approx. 2.5VA
  DC power: Rating ±10%, approx. 2.5W

■ GENERAL PRECAUTIONS

- Before you remove the unit from its base socket or mount it, turn off the power supply and input signal for safety.

■ ENVIRONMENT

- Indoor use.
- When heavy dust or metal particles are present in the air, install the unit inside proper housing with sufficient ventilation.
- Do not install the unit where it is subjected to continuous vibration. Do not subject the unit to physical impact.
- Environmental temperature must be within -5 to +55°C (23 to 131°F) with relative humidity within 30 to 90% RH in order to ensure adequate life span and operation.

■ WIRING

- Do not install cables close to noise sources (relay drive cable, high frequency line, etc.).
- Do not bind these cables together with those in which noises are present. Do not install them in the same duct.

■ CJC SENSOR

- The unit is calibrated to match inherent characteristics of each temperature sensor for cold junction compensation. Keep it secure while it is unused for other input types.

■ AND ....

- The unit is designed to function as soon as power is supplied, however, a warm up for 10 minutes is required for satisfying complete performance described in the data sheet.

COMPONENT IDENTIFICATION

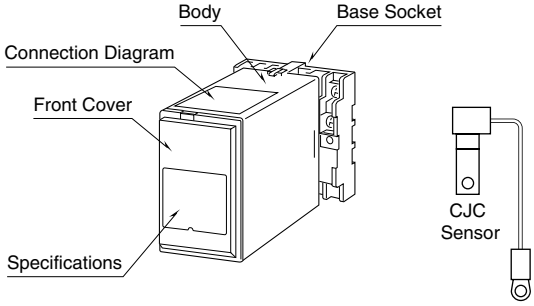

■ HOW TO OPEN THE FRONT COVER:

Position your finger on the hook at the top of front cover and pull.

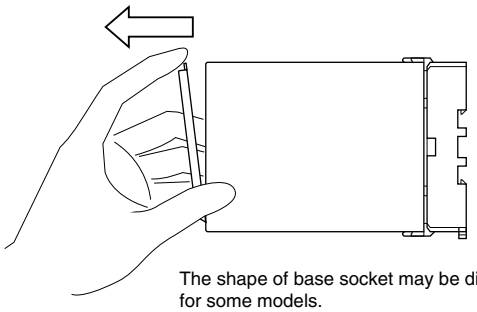

The shape of base socket may be different for some models.

■ FRONT PANEL CONFIGURATIONS

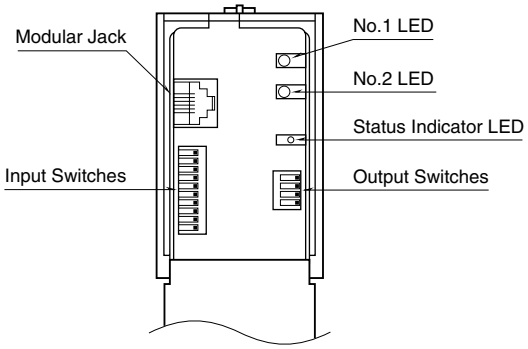

INSTALLATION

Detach the yellow clamps located at the top and bottom of the unit for separate the body from the base socket.

■ DIN RAIL MOUNTING

Set the base socket so that its DIN rail adaptor is at the bottom. Position the upper hook at the rear side of base socket on the DIN rail and push in the lower. When removing the socket, push down the DIN rail adaptor utilizing a minus screwdriver and pull.

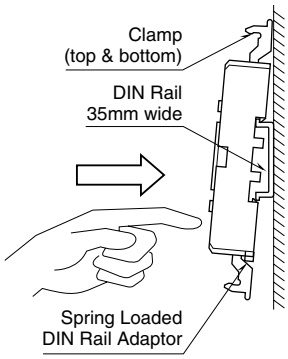

Shape and size of the base socket are slightly different with various socket types.

■ WALL MOUNTING

Refer to "EXTERNAL DIMENSIONS."

TERMINAL CONNECTIONS

Connect the unit as in the diagram below or refer to the connection diagram on the top of the unit.
For a thermocouple input, attach the CJC (cold junction compensation) sensor together with input wiring to the input screw terminals. The sensor is not interchangeable with one another. Make sure that the serial No. of the unit and the sensor matches.

■ EXTERNAL DIMENSIONS unit: mm (inch)

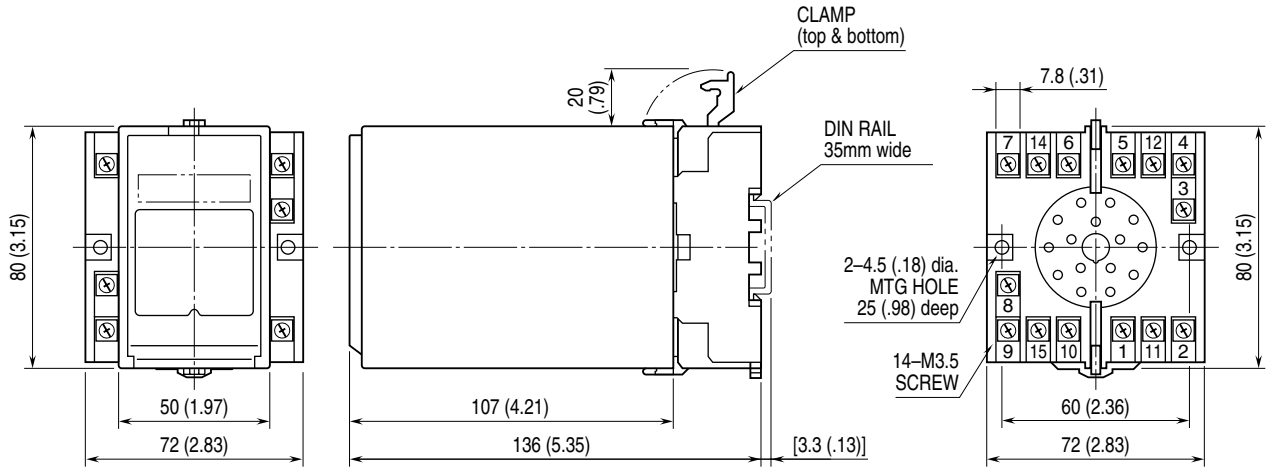

• When mounting, no extra space is needed between units.

■ CONNECTION DIAGRAM

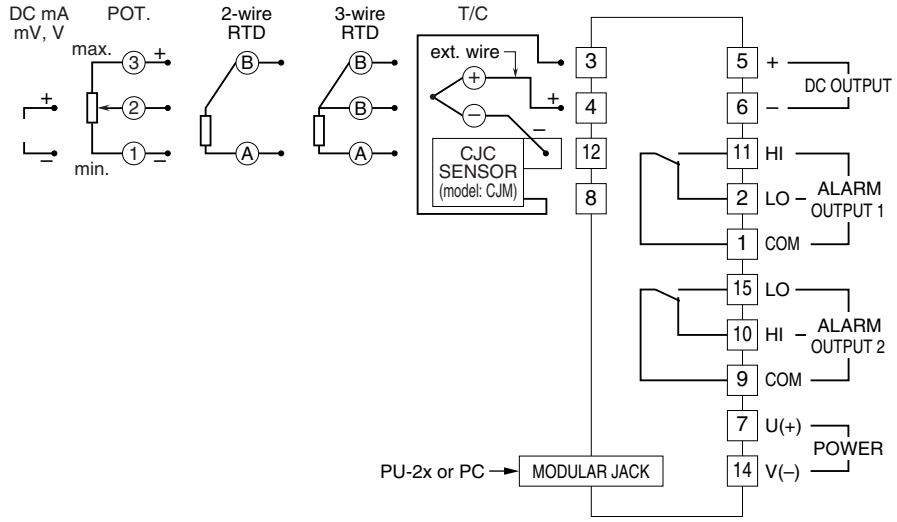

■ TERMINAL ASSIGNMENT unit: mm (inch)

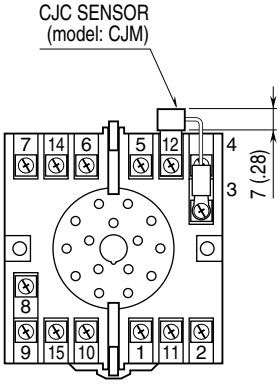

CJC sensor attached for a thermocouple input.

FUNCTION & FEATURES

- Accepting DC mV, V, and mA, thermocouples, RTDs, or potentiometer inputs.
- Providing a DC output and SPDT relay outputs.
- Selecting I/O types with hardware switches and determining ranges and other functions with software programming.
- DC input: 3 mV through ±10 V or 30 µA through ±50 mA.
- 10 selections of standard thermocouples.
- 2- or 3-wire Pt 100 (JIS '97 and IEC Standards). For 2- wire connection, leadwire resistance is automatically compensated by setting a resistance beforehand.
- Linearization available for potentiometer input (100-point calibration).
- Programmable DC output range.
- SPDT relays are programmable for any combination of Hi and Lo trips.
- Simulating output with the Programming Unit.

BASIC OPERATION

After the power is turned on, the JUA accesses and checks data such like input type and zero/span settings stored in its nonvolatile memory. When there is no abnormality, it starts measuring.

However, if there is no parameter data found in the memory, or if there are discrepancies between the software data and the JUA's hardware setting, the transmitter does not function properly.

The JUA is provided with a status indicator LED which blinks in different patterns indicating various status of its CPU. When it is functioning within normal parameters, the LED blinks in a regular pattern of ON and OFF repeating in approx. 3 Hz.

The following figure indicates typical patterns. One cycle of a pattern takes 320 milliseconds. A white circle means that the light is OFF, while a black one means ON.

NORMAL BLINKING PATTERNS

●○●○●○●○●○●○●○●○●○
Running mode, normal input status

●●●○●●●○●●●○●●●○
Running mode, burnout status

●●○○●●○○●●○○●●○○
Program mode

ABNORMAL BLINKING PATTERNS

●○●○●○●○○○○○○○○○○
Parameters are destroyed but recovering.

●○●○○○○○○○○○○○○○○
Unable to read parameters.

HARDWARE SETTING

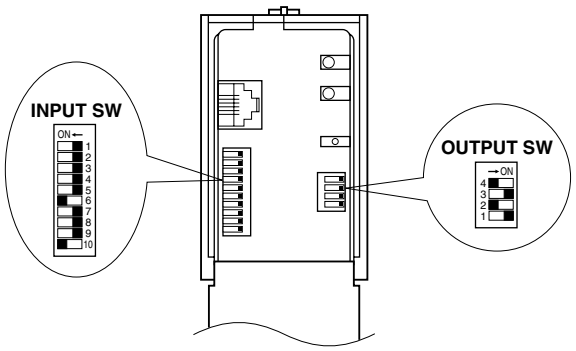

■ **SWITCH SETTING**

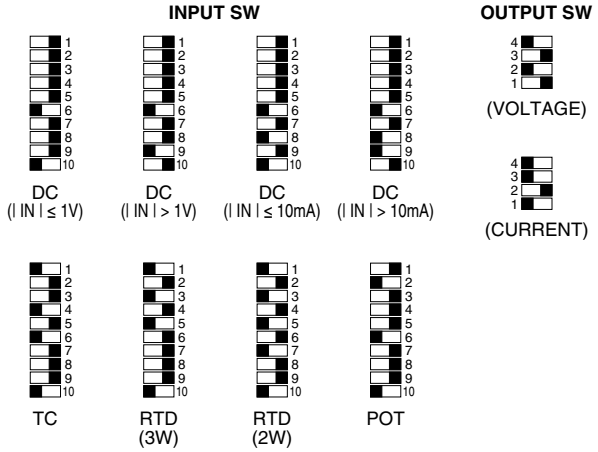

Be sure to turn off the power supply to the unit before changing the switch setting.

SOFTWARE SETTING

You can program various parameters with Programming Unit, model: PU-2x. For detailed explanations, please refer to the Operation Manual for Model PU-2x (EM-9255), Section A.
In the Programming Unit, specifying GROUP No. and ITEM No. (each 2 digits) determines which item is to be changed.
GROUP 00 is for system functions: software version information.
GROUP 01 through 03 include all necessary parameters for the transmitter. The table below indicates all items related to this unit.

Which items are to be specified for each input type are listed in later pages.
In the tables, each MDFY. (modification) mark indicates:
D: No modification (writing) possible. Used only for monitoring (reading).
S: Modifiable at any time.
P: Modifiable only when the MAINTENANCE SWITCH is in the "PRG" mode.

[GROUP 00]

ITEM	MDFY.	DATA INPUT	DISPLAY	CONTENTS
99	D	No input	JUA VERXXXX	ROM version No.

[GROUP 01]

ITEM	MDFY.	DATA INPUT	DISPLAY	CONTENTS
00	P	1		Default setting
01	S			MAINTENANCE SWITCH (lock command)
		0	MTSW: MON.MODE	MONITOR mode: data monitoring only
		1	MTSW: PRG.MODE	PROGRAM mode: "P" marked data modifiable
02	P	Alphabets & No.	TG: XXXXXXXXXX	Tag name entry (10 characters max.)
03	P	Percentage	OUTPER XXX.XX	Output status monitor (%) & simulation output
04	D	No input	OUTTMP XXXXXX	Output temperature for T/C & RTD input, temperature unit as selected in ITEM 21.
05	D	No input	INPPER XXX.XX	Input status monitor (%)
06	D	No input	INPVAL XXX.XX	Input status monitor in actual value DC: mV or mA T/C & RTD: temperature (unit selected in ITEM 21) Potentiometer: %
07	D	No input	CJMTMP XXX.XX	Cold junction temperature (unit selected in ITEM 21) T/C inputs only.
10	P			TYPE OF TRANSMITTER INPUT
				DC mV, V & mA
		11	mV-0:	Specify a voltage range in ITEM 14 & 15 (3 – 10000 mV)
		12	mV-4: 0 – 10V	
		13	mV-5: 0 – 5V	
		14	mV-6: 1 – 5V	
		15	mV-Z:	Specify a current range in ITEM 14 & 15 (0.03 – 50 mA)
		16	mV-A: 4 – 20mA	
		17	mV-B: 2 – 10mA	
		18	mV-D: 0 – 20mA	
				Thermocouples
		0	Tc-0: N	N
		1	Tc-1: (PR)	(PR)
		2	Tc-2: K (CA)	K (CA)
		3	Tc-3: E (CRC)	E (CRC)
		4	Tc-4: J (IC)	J (IC)
		5	Tc-5: T (CC)	T (CC)
		6	Tc-6: B (RH)	B (RH)
		7	Tc-7: R	R
		8	Tc-8: S	S
		9	Tc-9: WRe 5-26	WRe 5-26
				RTDs
		31	RB-1: Pt 100	3-wire Pt 100
		32	RB-2: JPt 100	3-wire JPt 100
		51	RB-A: Pt 100	2-wire Pt 100
		41	POT	Potentiometer

ITEM	MDFY.	DATA INPUT	DISPLAY	CONTENTS
11	P			DC output range
		11 12 13 14 15 16 17 18	mV-0: mV-4: 0 – 10V mV-5: 0 – 5V mV-6: 1 – 5V mV-Z: mV-A: 4 – 20mA mV-B: 2 – 10mA mV-D: 0 – 20mA	Specify a voltage range in ITEM 12 & 13 (4 – 10 V) Specify a current range in ITEM 12 & 13 (8 – 20 mA)
12	P	Actual value	OUTLOW XX.XXX	DC output, 0% value. Use the same unit as for the range selected in ITEM 11.
13	P	Actual value	OUTHIG XX.XXX	DC output, 100% value Use the same unit as for the range selected in ITEM 11.
14	P	Actual value	SCLLOW XXXXXX	Input range scaling, 0% value (Set SCLHIG before SCLLOW.) DC mV, V & mA: unit of mV or mA. Decimals are usable. T/C: temperature (unit: ITEM 21). One decimal place is usable. RTD: temperature (unit: ITEM 21). One decimal place is usable. Potentiometer: %
15	P	Actual value	SCLHIG XXXXXX	Input range scaling, 100% value (Set SCLHIG before SCLLOW.) DC mV, V & mA: unit of mV or mA. Decimals are usable. T/C: temperature (unit: ITEM 21). One decimal place is usable. RTD: temperature (unit: ITEM 21). One decimal place is usable. Potentiometer: %
19	P	Percentage	FINZER	Fine zero adjustment Initial status shows actual bias (%). When data is entered, output (%) is shown.
20	P	Percentage	FINSPN	Fine span adjustment Initial status shows actual gain (%). When data is entered, output (%) is shown.
21	P			Temperature unit (T/C & RTD inputs only)
		0 1 2	0: INPSCL [°C] 1: INPSCL [F] 2: INPSCL [K]	ITEM 14 & 15 must be reprogrammed after the temp. unit has been changed.
23	P			Linearization (DC & potentiometer inputs only)
		0 1	0: LNR NO OPT 1: LNR OPTION	Proportional output Linearized output (table in Group 02 & 03)
24	P			Burnout protection (T/C & RTD inputs only)
		0 1	0: BO HIGH 1: BO LOW	Upscale burnout Downscale burnout
25	P			Type of Alarm Output 1
		0 1 2	0: NO ALARM 1: LOW ALARM 2: HIG ALARM	No alarm output 1 Low trip (Set ITEM 26) High trip (Set ITEM 26)
26	P	Actual value	AL1SET XXX.XX	Setpoint for Alarm Output 1 (unit: ITEM 38)
27	P	Actual value	AL1HYS XXX.XX	Deadband (hysteresis) for Alarm Output 1 (unit: ITEM 38)
28	P			Type of Alarm Output 2
		0 1 2	0: NO ALARM 1: LOW ALARM 2: HIG ALARM	No alarm output 2 Low trip (Set ITEM 29) High trip (Set ITEM 29)
29	P	Actual value	AL2SET XXX.XX	Setpoint for Alarm Output 2 (unit: ITEM 39)
30	P	Actual value	AL2HYS XXX.XX	Deadband (hysteresis) for Alarm Output 2 (unit: ITEM 39)
31	P			Input-Output characteristics
		0 1	0: NORMAL 1: INVERTED	Normal Inverted output
32	P	Ω	LEADERS XXXXX	Leadwire resistance for a 2-wire RTD (per wire)
34	P	°C	CJMTt XXXX.X	Ambient temperature (unit: °C, ≥ 20.0, < 30.0)
35	P	Voltage	CTMVt XXXX.X	CJM reference voltage at the measured temperature (unit: mV)
38	P			Engineering unit used in ITEM 26, 27
		0 1	0: AL1SET PER 1: AL1SET REAL	% Actual value
39	P			Engineering unit used in ITEM 29, 30
		0 1	0: AL2SET PER 1: AL2SET REAL	% Actual value

ITEM	MDFY.	DATA INPUT	DISPLAY	CONTENTS
80	P	Seconds	AL1DLY XX.X	ON delay time for Alarm Output 1, within 0 – 60 sec.
81	P	Seconds	AL2DLY XX.X	ON delay time for Alarm Output 2, within 0 – 60 sec.
82	P	Seconds	AL1POT XX.X	Power On delay time for Alarm Output 1, within 2 – 60 sec.
83	P	Seconds	AL2POT XX.X	Power On delay time for Alarm Output 2, within 2 – 60 sec.
84	P			Coil status at tripped condition for Alarm Output 1
		0 1	0: AL1 COIL 1: AL1 COIL	Energized De-energized
85	P			Coil status at tripped condition for Alarm Output 2
		0 1	0: AL2 COIL 1: AL2 COIL	Energized De-energized

The following [GROUP 02] and [GROUP 03] are used to program linearization table.

[GROUP 02]

ITEM	MDFY.	DATA INPUT	DISPLAY	CONTENTS
00 01	P P	Percentage Percentage	X (00): XXX.XX Y (00): XXX.XX	Input 0 Output 0
: : :	: : :	: : :	: : :	: : :
98 99	P P	Percentage Percentage	X (49): XXX.XX Y (49): XXX.XX	Input 49 Output 49

[GROUP 03]

ITEM	MDFY.	DATA INPUT	DISPLAY	CONTENTS
00 01	P P	Percentage Percentage	X (50): XXX.XX Y (50): XXX.XX	Input 50 Output 50
: : :	: : :	: : :	: : :	: : :
98 99	P P	Percentage Percentage	X (99): XXX.XX Y (99): XXX.XX	Input 99 Output 99

■ DC INPUT

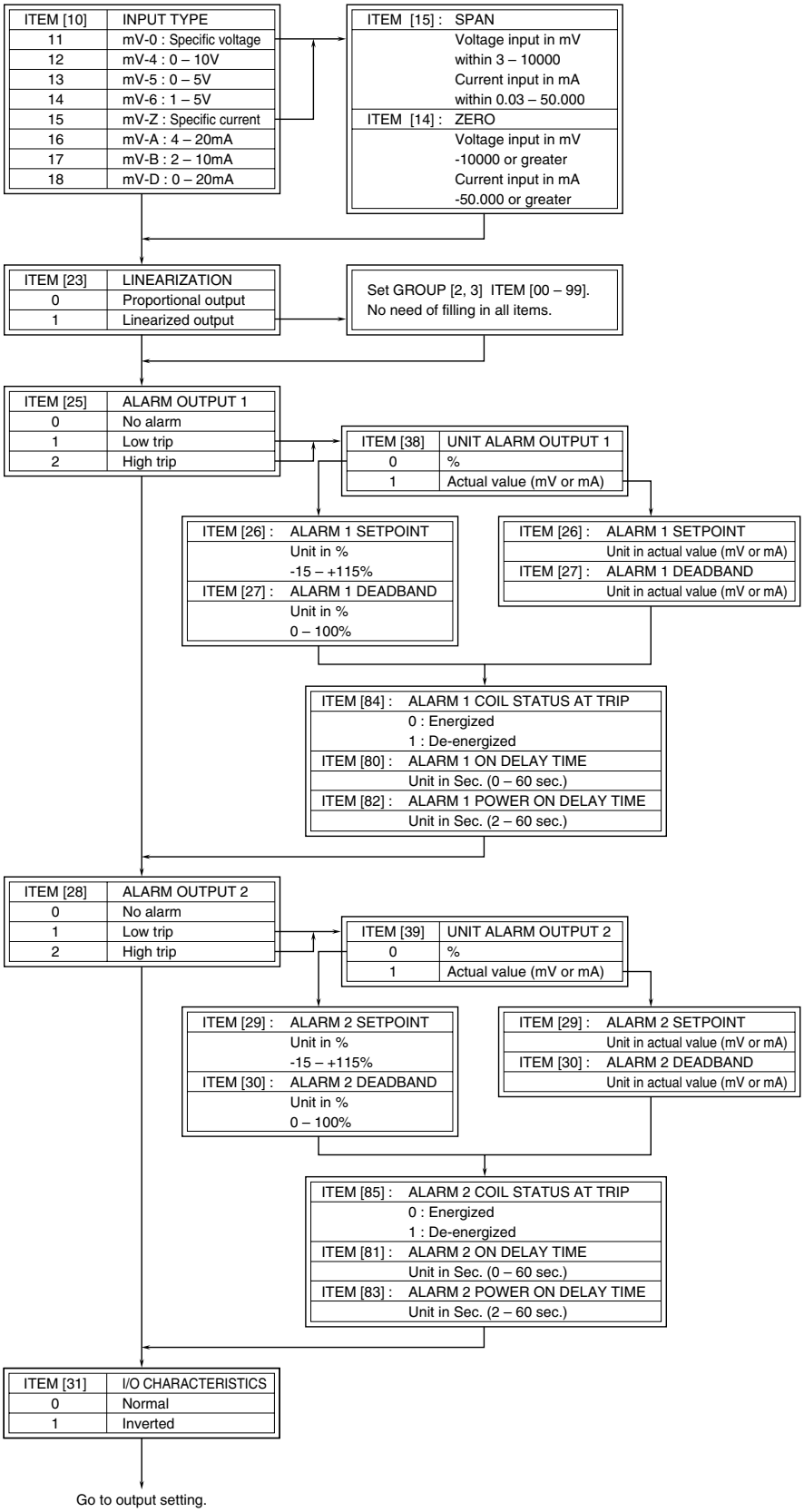
ITEM [10] INPUT TYPE
11 mV-0 : Specific voltage
12 mV-4 : 0 – 10V
13 mV-5 : 0 – 5V
14 mV-6 : 1 – 5V
15 mV-Z : Specific current
16 mV-A : 4 – 20mA
17 mV-B : 2 – 10mA
18 mV-D : 0 – 20mA
ITEM [15] : SPAN
Voltage input in mV
within 3 – 10000
Current input in mA
within 0.03 – 50.000
ITEM [14] : ZERO
Voltage input in mV
-10000 or greater
Current input in mA
-50.000 or greater
ITEM [23] LINEARIZATION
0 Proportional output
1 Linearized output
Set GROUP [2, 3] ITEM [00 – 99].
No need of filling in all items.
ITEM [25] ALARM OUTPUT 1
0 No alarm
1 Low trip
2 High trip
ITEM [38] UNIT ALARM OUTPUT 1
0 %
1 Actual value (mV or mA)
ITEM [26] : ALARM 1 SETPOINT
Unit in %
-15 – +115%
ITEM [27] : ALARM 1 DEADBAND
Unit in %
0 – 100%
ITEM [26] : ALARM 1 SETPOINT
Unit in actual value (mV or mA)
ITEM [27] : ALARM 1 DEADBAND
Unit in actual value (mV or mA)
ITEM [84] : ALARM 1 COIL STATUS AT TRIP
0 : Energized
1 : De-energized
ITEM [80] : ALARM 1 ON DELAY TIME
Unit in Sec. (0 – 60 sec.)
ITEM [82] : ALARM 1 POWER ON DELAY TIME
Unit in Sec. (2 – 60 sec.)
ITEM [28] ALARM OUTPUT 2
0 No alarm
1 Low trip
2 High trip
ITEM [39] UNIT ALARM OUTPUT 2
0 %
1 Actual value (mV or mA)
ITEM [29] : ALARM 2 SETPOINT
Unit in %
-15 – +115%
ITEM [30] : ALARM 2 DEADBAND
Unit in %
0 – 100%
ITEM [29] : ALARM 2 SETPOINT
Unit in actual value (mV or mA)
ITEM [30] : ALARM 2 DEADBAND
Unit in actual value (mV or mA)
ITEM [85] : ALARM 2 COIL STATUS AT TRIP
0 : Energized
1 : De-energized
ITEM [81] : ALARM 2 ON DELAY TIME
Unit in Sec. (0 – 60 sec.)
ITEM [83] : ALARM 2 POWER ON DELAY TIME
Unit in Sec. (2 – 60 sec.)
ITEM [31] I/O CHARACTERISTICS
0 Normal
1 Inverted
Go to output setting.

■ THERMOCOUPLE INPUT

ITEM [10]	INPUT TYPE
0	Tc-0 : N
1	Tc-1 : (PR)
2	Tc-2 : K (CA)
3	Tc-3 : E (CRC)
4	Tc-4 : J (IC)
5	Tc-5 : T (CC)
6	Tc-6 : B (RH)
7	Tc-7 : R
8	Tc-8 : S
9	Tc-9 : WRe 5-26

CAUTION
In case you have bought a new CJC sensor, go through adjustment as described in P.12.

ITEM [21]	TEMPERATURE UNIT
0	°C
1	F
2	K

ITEM [15]	SCALING 100%
Actual value	Temperature value

ITEM [14]	SCALING 0%
Actual value	Temperature value

ITEM [24]	BURNOUT PROTECTION
0	Upscale
1	Downscale

ITEM [25]	ALARM OUTPUT 1
0	No alarm
1	Low trip
2	High trip

ITEM [38]	UNIT ALARM OUTPUT 1
0	%
1	Actual value

ITEM [26] :	ALARM 1 SETPOINT
	Unit in %
	-15 – +115%
ITEM [27] :	ALARM 1 DEADBAND
	Unit in %
	0 – 100%

ITEM [26] :	ALARM 1 SETPOINT
	Unit in actual value
ITEM [27] :	ALARM 1 DEADBAND
	Unit in actual value

ITEM [84] :	ALARM 1 COIL STATUS AT TRIP
	0 : Energized
	1 : De-energized
ITEM [80] :	ALARM 1 ON DELAY TIME
	Unit in Sec. (0 – 60 sec.)
ITEM [82] :	ALARM 1 POWER ON DELAY TIME
	Unit in Sec. (2 – 60 sec.)

ITEM [28]	ALARM OUTPUT 2
0	No alarm
1	Low trip
2	High trip

ITEM [39]	UNIT ALARM OUTPUT 2
0	%
1	Actual value

ITEM [29] :	ALARM 2 SETPOINT
	Unit in %
	-15 – +115%
ITEM [30] :	ALARM 2 DEADBAND
	Unit in %
	0 – 100%

ITEM [29] :	ALARM 2 SETPOINT
	Unit in actual value
ITEM [30] :	ALARM 2 DEADBAND
	Unit in actual value

ITEM [85] :	ALARM 2 COIL STATUS AT TRIP
	0 : Energized
	1 : De-energized
ITEM [81] :	ALARM 2 ON DELAY TIME
	Unit in Sec. (0 – 60 sec.)
ITEM [83] :	ALARM 2 POWER ON DELAY TIME
	Unit in Sec. (2 – 60 sec.)

ITEM [31]	I/O CHARACTERISTICS
0	Normal
1	Inverted

Go to output setting.

■ RTD INPUT

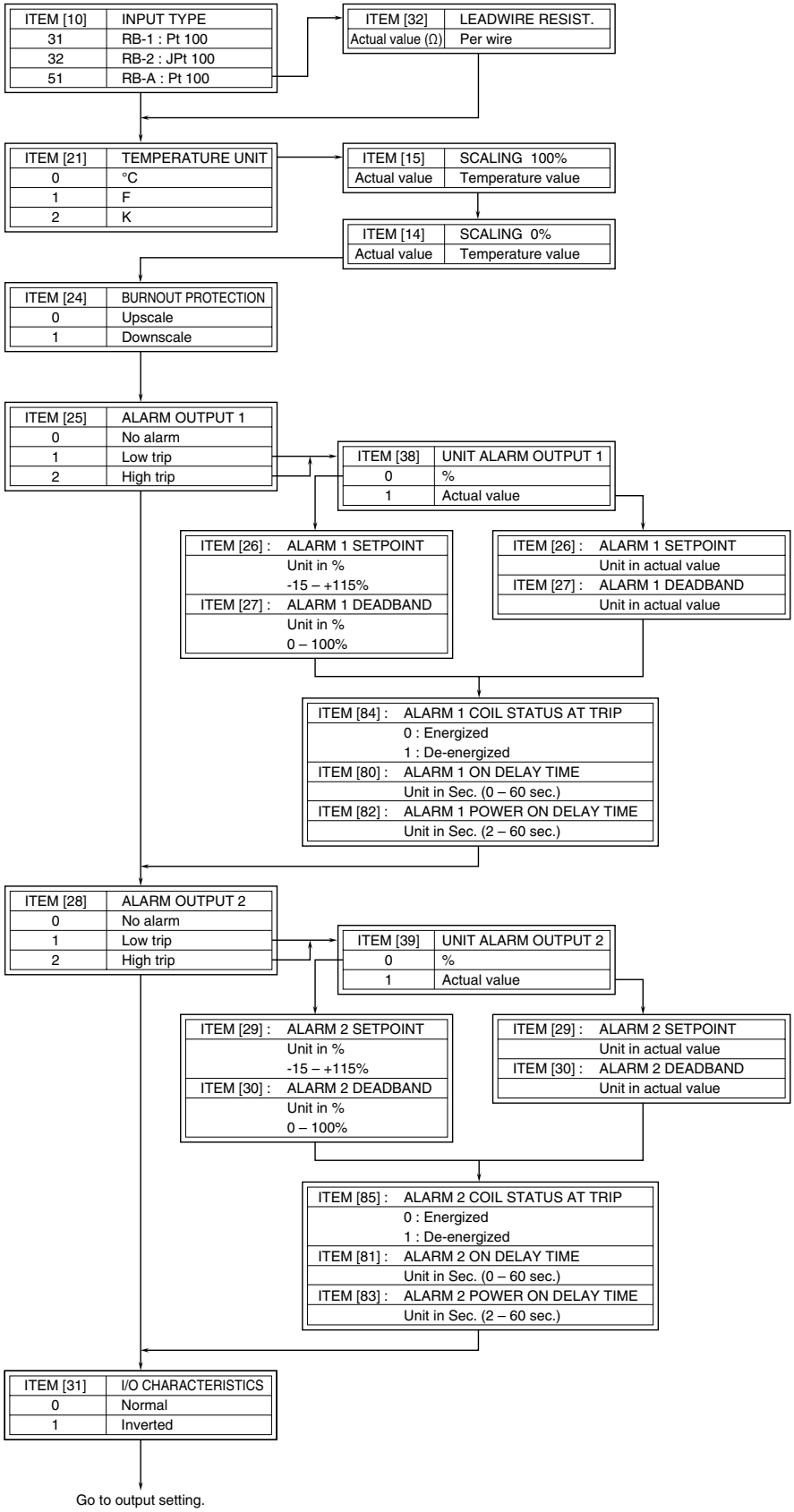
ITEM [10] INPUT TYPE
31 RB-1 : Pt 100
32 RB-2 : JPt 100
51 RB-A : Pt 100
ITEM [32] LEADWIRE RESIST.
Actual value (Ω) Per wire
ITEM [21] TEMPERATURE UNIT
0 °C
1 F
2 K
ITEM [15] SCALING 100%
Actual value Temperature value
ITEM [14] SCALING 0%
Actual value Temperature value
ITEM [24] BURNOUT PROTECTION
0 Upscale
1 Downscale
ITEM [25] ALARM OUTPUT 1
0 No alarm
1 Low trip
2 High trip
ITEM [38] UNIT ALARM OUTPUT 1
0 %
1 Actual value
ITEM [26] : ALARM 1 SETPOINT
Unit in %
-15 – +115%
ITEM [27] : ALARM 1 DEADBAND
Unit in %
0 – 100%
ITEM [26] : ALARM 1 SETPOINT
Unit in actual value
ITEM [27] : ALARM 1 DEADBAND
Unit in actual value
ITEM [84] : ALARM 1 COIL STATUS AT TRIP
0 : Energized
1 : De-energized
ITEM [80] : ALARM 1 ON DELAY TIME
Unit in Sec. (0 – 60 sec.)
ITEM [82] : ALARM 1 POWER ON DELAY TIME
Unit in Sec. (2 – 60 sec.)
ITEM [28] ALARM OUTPUT 2
0 No alarm
1 Low trip
2 High trip
ITEM [39] UNIT ALARM OUTPUT 2
0 %
1 Actual value
ITEM [29] : ALARM 2 SETPOINT
Unit in %
-15 – +115%
ITEM [30] : ALARM 2 DEADBAND
Unit in %
0 – 100%
ITEM [29] : ALARM 2 SETPOINT
Unit in actual value
ITEM [30] : ALARM 2 DEADBAND
Unit in actual value
ITEM [85] : ALARM 2 COIL STATUS AT TRIP
0 : Energized
1 : De-energized
ITEM [81] : ALARM 2 ON DELAY TIME
Unit in Sec. (0 – 60 sec.)
ITEM [83] : ALARM 2 POWER ON DELAY TIME
Unit in Sec. (2 – 60 sec.)
ITEM [31] I/O CHARACTERISTICS
0 Normal
1 Inverted
Go to output setting.

■ POTENTIOMETER INPUT

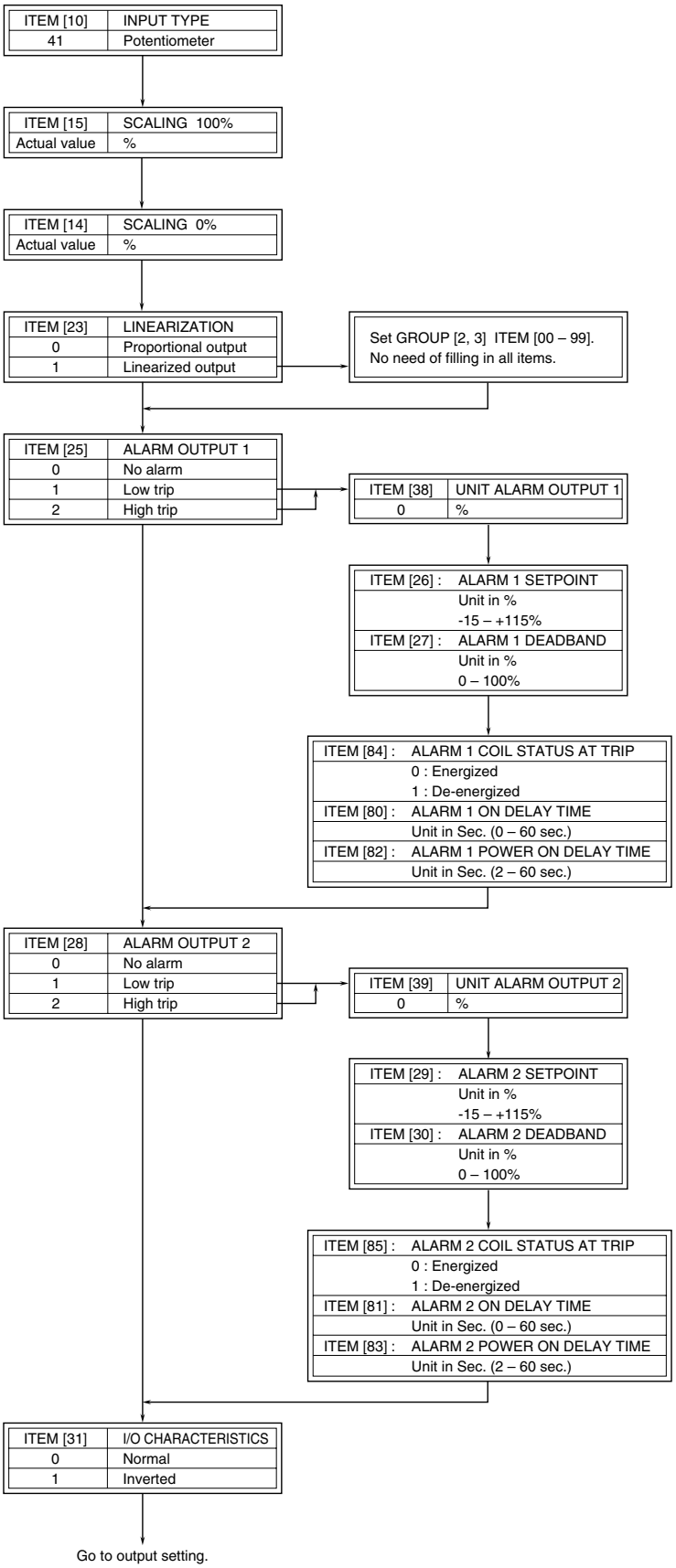

ADJUSTMENT PROCEDURE FOR DC OUTPUT

This unit is calibrated at the factory to meet the described accuracy. You usually do not need any calibration after changing switch setting and programming.
However, for matching the signal to a receiving instrument or in case of regular calibration, adjust the output as explained in the following.

■ HOW TO CALIBRATE THE OUTPUT SIGNAL

Use a signal source and measuring instruments of sufficient accuracy level. Turn the power supply on and warm up for more than 10 minutes.
When the Programming Unit (model: PU-2x) is connected to the transmitter, the output signal is held. Unplug the connection for confirming output variations.

1) ZERO: Apply 0% input. Key in [ITEM 19] and adjust output to 0%.
2) SPAN: Apply 100% input. Key in [ITEM 20] and adjust output to 100%.
3) Check ZERO adjustment again with 0% input.
4) When ZERO value is changed, repeat the above procedure 1) – 3).

REPLACING CJC SENSOR

If you lost the CJC sensor shipped originally with the unit, and bought a new one, it is necessary to program the sensor data in the unit.
[GROUP 01] [ITEM 34] : Enter temperature (°C) of the sensor.
[GROUP 01] [ITEM 35] : Enter voltage in mV.
Be careful with this procedure because the programming affects directly accuracy of the unit.

DEFAULT SETTING

Default setting is as shown in the table below.
Programming [GROUP 01] [ITEM 00] [DATA 1] returns the unit to its initial programmed status. Set DIP switches also as shown below.

ITEM	DEFAULT
Input type	1 – 5 V DC
DC output range	4 – 20 mA DC
Alarm outputs	Alarm output 1: Hi trip, 100% Alarm output 2: Lo trip, 0% Deadband (hysteresis): 0.5% Coil energized at alarm ON delay time: 0 sec. Power On delay time: 10 sec.
Linearization	Proportional output
I/O characteristics	Normal

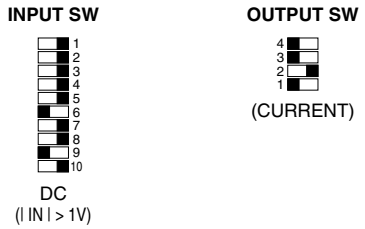

LIGHTNING SURGE PROTECTION

M-System offers a series of lightning surge protector for protection against induced lightning surges. Please contact M-System to choose appropriate models.

MAINTENANCE

Regular calibration procedure is explained below:

■ CALIBRATION

Warm up the unit for at least 10 minutes. Apply 0%, 25%, 50%, 75% and 100% input signal. Check that the output signal for the respective input signal remains within accuracy described in the data sheet. When the output is out of tolerance, recalibrate the unit according to the "ADJUSTMENT PROCEDURE FOR DC OUTPUT" explained earlier.

■ TROUBLESHOOTING

Refer to the flow chart below.