DC/TEMPERATURE INPUT LIMIT ALARM
(digital adjustments)

MODEL **KS2V/KS2TR**

BEFORE USE ....

Thank you for choosing M-System. Upon opening the package you received, check the following points.

■ PACKAGE INCLUDES:

- Limit alarm (body + base socket) ..... (1)
- Mounting bracket ..... (1)
- Engineering unit label ..... (1)
- Instruction manual ..... (1)

■ MODEL NO.

Check that model No. described on specification label is exactly what you ordered.

■ INSTRUCTION MANUAL

Please make sure this Instruction Manual be delivered to End-User's hands.

SAFETY PRECAUTIONS

Before use, please read the following precautions carefully to ensure the safety. These safety precautions, classified into "WARNING" and "CAUTION" according to the degree of damage each item can cause, are imperative to prevent an accident.

⚠WARNING	Suggesting that mishandling the product can result in personal death or serious injury.
⚠CAUTION	Suggesting that mishandling the product can result in personal injury or damage to the property.

1. ⚠ WARNING

1.1. WIRING

1) Wiring and installation
   - For safely operating the unit, when the temperature probe is to be installed in an environment where voltages exceed 50V DC, it is required that a reinforced or basic insulation between each of the terminals at the rear of this unit and the earth ground is maintained, and that a supplementary insulation is maintained for the alarm outputs.
   - For power wiring, use vinyl insulated wires rated 600V or equivalent.
   - Install a double-pole switch breaking both poles of the Mains supply together with a fuse rated 250V @1A. Fuse must be placed between the Main SW and the unit.
   - This unit is provided with the following classes of insulation:
     Mains – Input : basic
     Mains – Each of alarm outputs : basic
     Input – Each of alarm outputs : basic
     SET1 – SET2 : basic
     Prior to installation, check that the insulation class of this unit satisfies the system requirements.

2) Environmental conditions
   Operating temperature : -10 to +50°C or 14 to 122°F
   Operating humidity : 30 to 90% RH (non-condensing)
   Installation category : II
   Pollution degree : 2

3) If there is a danger of a serious damage resulting from a failure or a defect in this unit, be sure to provide the unit with an appropriate external protective circuit to prevent such.

4) The unit is not equipped with a power switch or a fuse. Install ones externally when necessary.

5) For maximum relay life with inductive loads, external protection is recommended.

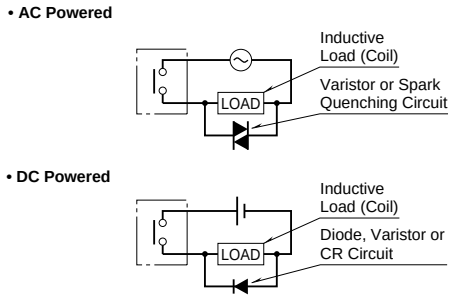

6) When the unit is to be introduced into a system which uses or generates a hazardous voltage, the minimum clearance and creepage distances to ensure an appropriate insulation must be maintained between the temperature probe and such a system. A hazardous voltage is one that exceeds 60V DC or 30V AC.

The equipment must be installed such that, <u>except in the connection to the Mains (installation category III)</u>, the clearance and creepage distances specified in the table below are maintained between the temperature probe and any other assemblies which use or generate a voltage shown in the same table.

Clearance (mm)	Creepage (mm)	Working voltage
0.2	1.2	Up to 50 V rms or V DC
0.2	1.4	Up to 100 V rms or V DC
0.5	1.6	Up to 150 V rms or V DC
1.5	3.0	Up to 300 V rms or V DC

IMPORTANT NOTE: Failure to maintain these minimum distances would invalidate the EN 61010 safety approval. Following the installation of the system, prior to powering it up, be sure to confirm that an appropriate insulation level is ensured against the hazards of electric shock and fire.

■ **EXAMPLE OF SAFE INSTALLATION OF THE UNIT**

The diagram below shows an example of safe installation of the unit in an environment where hazardous voltages may exist.

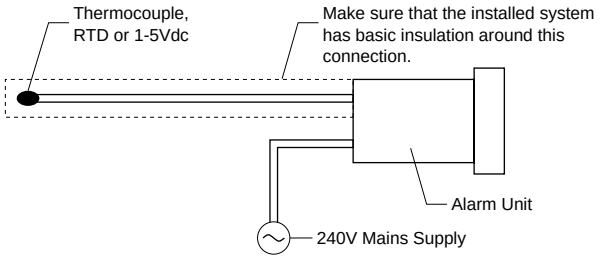

• **Creepage and Clearance Distances**

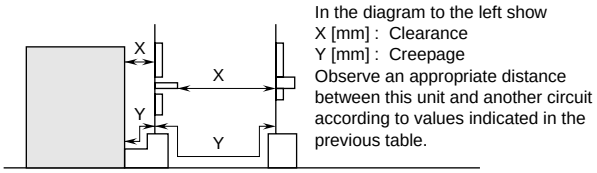

1.2. POWER SUPPLY

1) Use the rated voltage supply to prevent a damage or failure of the unit.
2) DO NOT TURN POWER SUPPLY ON before completing all wiring to the unit to prevent an electric shock or a failure of the unit.
3) DO NOT PLUG or UNPLUG the body from its base socket with the power supply on.

1.3. PROHIBITION OF USING THE UNIT IN GASEOUS ATMOSPHERE

1) This unit is NOT of intrinsically safe construction. DO NOT attempt to use it in flammable or explosive gas atmosphere.

1.4. PROHIBITION OF TAMPERING WITH THE UNIT

1) NEVER attempt to disassemble, fabricate, modify or repair the unit. Such action may result in a malfunction, electric shock, or fire.
2) DO NOT TOUCH the terminals while the circuit is energized in order to prevent an electric shock or malfunction.

1.5. MAINTENANCE

1) Be sure to turn the power supply off before installing or removing the unit in order to prevent an electric shock or malfunction.
2) Regular maintenance is recommended for continuous and safe use of the unit.

2. ⚠ CAUTION

2.1. GENERAL HANDLING

1) Keep away from the following environments when installing the unit.
   - Where the ambient temperature in operating the unit may reach beyond the range of 0 to 50°C or 32 to 122°F.
   - Where the relative humidity in operating the unit may reach beyond 45 – 85% RH.
   - Rapid temperature change or condensation
   - Corrosive gases, sulfide and ammonia in particular, or flammable gases
   - Vibration or mechanical shock
   - Direct contact with water, oil, chemical materials, steam or vapor
   - Exposure to air containing heavy dust particles, salt, chemical components, or iron particles.
   - Interference by static and magnetic noise
   - Direct sunlight
   - Heat accumulated by radiation or such
2) Mounting the unit
   Push in the mounting bracket from behind the panel until the main body is securely fit on to the panel surface.
   If there remains a play, tighten lightly the two screws to stabilize the unit. Do not tighten too much because the mounting bracket may be off the stopper by such force.
3) Contact M-System's representative or Factory for inspecting the unit for danger of electric shock or malfunction when the unit is soaked in water.

2.2. WIRING CONNECTION

1) Use appropriate thermocouple extension wires for a thermocouple input.
2) Use wiring material with small leadwire resistance and with no resistance difference among three wires for a RTD input.
3) Where the external wiring is subjected to noise interferences, protect the unit as follows:
   - For connecting a contactor employed as load of alarm outputs, attach a surge absorber to the contactor on the coil side.
   - An additional installation of isolating transformer and use of noise filter are recommended when an excessive noise exists in the power supply.
   - Make sure that the noise filter is installed to a properly grounded panel or such place and that the wiring between the output side of the filter and the power supply terminals of the unit is made as short as possible.
   - Do not install a switch or fuse on the output side of the filter because it will degrade effectiveness of the filter.
   - Stranded power supply wires are effective for protection against noise. Better result will be expected with shorter stranding pitch.
4) The contact outputs require a set-up time when the power is turned on. If they are to be used for an external interlock circuit, add ON-delay relay.
5) Keep input signal and power wiring to the unit away from power supply or load lines in order to avoid inductive noise interference.
   Use shielded wires for input signal line and separate them from other wires.
6) Frequent switchings with the relay connected to a load for its maximum capability will shorten the relay life. An auxiliary relay is recommended.
7) Specifications of the unit
   - Rated power supply: 100V (-15%) up to 240V (+10%) AC, 47 – 66 Hz, 15VA; 24V DC ±10%
   - Power consumption: approx. 3.5W with AC power, approx. 3W with DC power
   - Alarm output*1: SPDT (transfer) contacts, 220V AC or 30V DC @3A (resistive load)

*1. N.O. and N.C. contacts could be conductive at the same time. DO NOT connect both contacts at the same time.

2.3. KEY OPERATION AND OPERATION IN ABNORMALITIES

1) Prior to operation, test alarm functions to confirm correct alarm mode setting.
2) When the input wires are broken, the unit displays UUUU or LLLL. Be sure to turn off the power supply before replacing the sensor.

2.4. OTHERS

1) Do not use organic solvents such as alcohol or benzine to clean the unit. Use a neutral detergent.

3. EXTERNAL DIMENSIONS & MOUNTING REQUIREMENTS mm (inch)

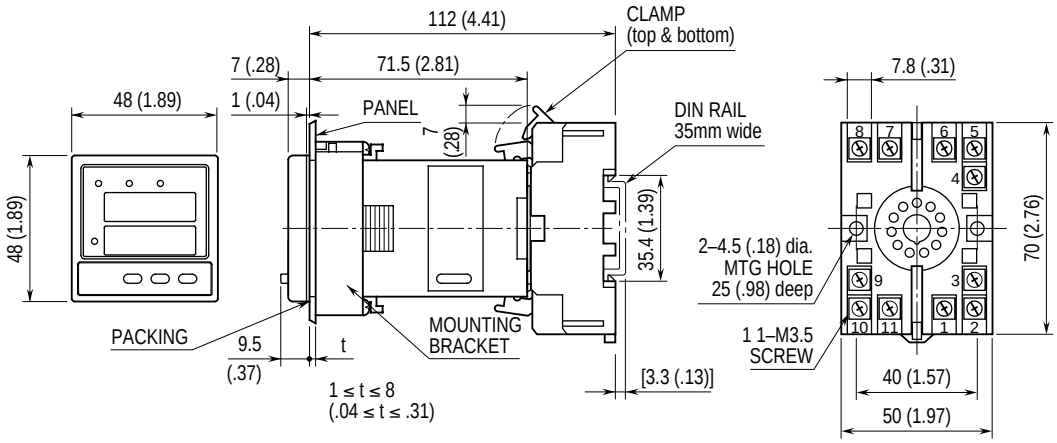

■ **PANEL CUTOUT**

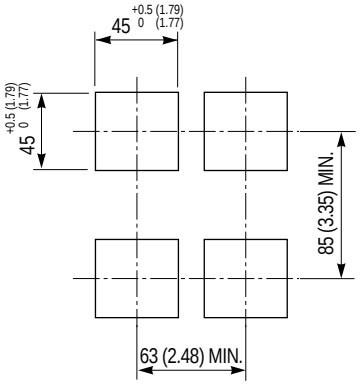

4. CONNECTION DIAGRAM

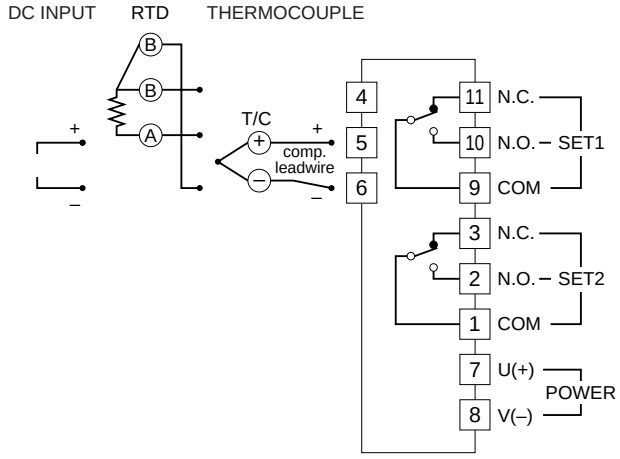

5. COMPONENT IDENTIFICATION

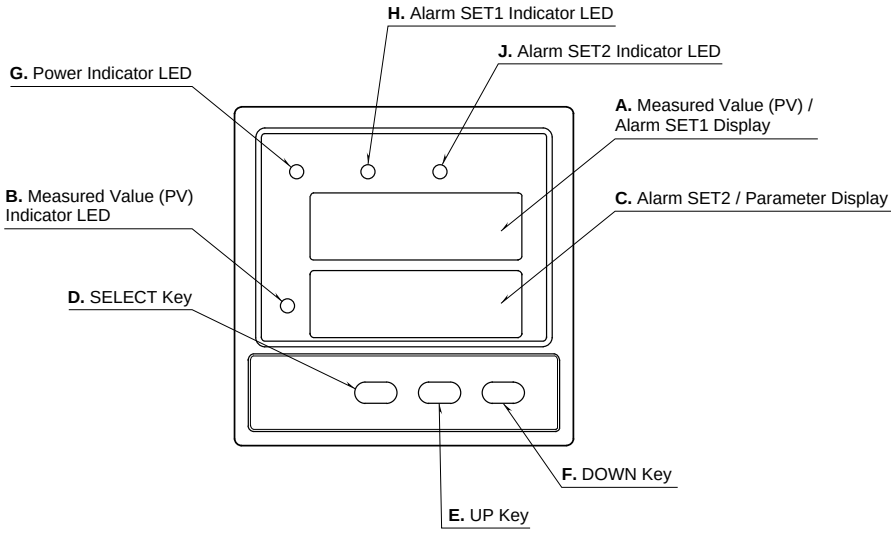

Ref.	Component Name	Function
A	Measured Value (PV) / Alarm SET1 Display	Displaying either of Measured Value (PV) or Alarm Setpoint Value (SET1)
B	Measured Value (PV) Indicator LED	Light turns on when the PV Display (**A**) displays Alarm Setpoint Value (SET1).
C	Alarm SET2 / Parameter Display	Displaying either of Alarm Setpoint Value (SET2) or parameter type code.
D	SELECT Key	Used for confirming current setpoints and switching between parameter blocks.
E	UP Key	Pressing the key increases display values. They change continuously when it is kept pressed.
F	DOWN Key	Pressing the key decreases display values. They change continuously when it is kept pressed.
G	Power Indicator LED	Light turns on while the power is turned on.
H	Alarm SET1 Indicator LED	Light turns on when the Alarm SET1 is in tripped conditions.
J	Alarm SET2 Indicator LED	Light turns on when the Alarm SET2 is in tripped conditions.

6. PREPARING POWER-UP

When the power is turned on, the unit displays "...." on the Measured Value (PV)/Alarm Setpoint Value (SET1) Display and on the Alarm Setpoint Value (SET2)/Parameter Display before starting operation.
To ensure a proper operation of the unit, set the parameters before starting up according to the operating conditions.
Be sure to remove power of the final control element before parameters setting.
Wait for 30 minutes for warming up the unit before its temperature is stabilized and measuring is started.

7. HOW TO SET PARAMETERS

7.1. CONFIRMING CURRENT MEASURED VALUE AND ALARM SETPOINT VALUES

Pressing SEL key turns the display in order of SET1, SET2, PV, and blank.

Key	Status or Operation	Display
	Current display (PTn = 1 in this example)*2	Display pattern 1 Upper = ST1 (setpoint) Lower = ST2 (setpoint)
SEL	Press the key once.	Display pattern 2 Upper = PV (value) Lower = blank
SEL	Press the key once.	Display pattern 3 Upper = blank Lower = blank
SEL	Press the key once.	Returning to Display pattern 1

*2. Which display pattern is to be displayed first after the power is turned on can be programmed in Parameter block 1.

7.2. REGISTERING SETTING

1) Data is registered automatically in 3 seconds after the data is set. Pressing SEL key also register the data.
2) The display automatically returns to the display pattern preset by PTn parameter when the unit is left for approx. 30 seconds with no access.

7.3. DEFAULT PARAMETER SETTING

Param. Block	Name	Default setting		Unit	Programmable range	Explanations of function
		KS2V	KS2TR			
1*3	ST1	100.0	1200	Engineering unit*6	-5 to +105 % FS	Alarm setpoint value SET1
	ST2	0.0	0	Engineering unit*6	-5 to +105 % FS	Alarm setpoint value SET2
	PTn	1	1	N/A	1, 2, 3	Display pattern
2*4	HYS1	1.0	1	Deviative engineering unit*6	0 to 102 % FS	Hysteresis for SET1
	HYS2	1.0	1	Deviative engineering unit*6	0 to 102 % FS	Hysteresis for SET2
	P-n2	16	3	N/A	0 to 16	Input type
	P-SL	0.0	0	Engineering unit*6	-1999 to 9999	Scaling, lower range
	P-SU	100.0	1200	Engineering unit*6	-1999 to 9999	Scaling, upper range
	P-dP	1	0	N/A	0, 1 or 0, 1, 2*7	Decimal point position
	P-A1	1	1	N/A	0 to 8	Alarm mode for SET1
	P-A2	2	2	N/A	0 to 8	Alarm mode for SET2
	bUm	H	H	N/A	H, L	Burnout protection (upscale or downscale)
	P-F	°C	°C	N/A	°C, °F	Temperature unit
	P-d1	1	1	Seconds	1 to 10	Switching delay timer for SET1
	P-d2	1	1	Seconds	1 to 10	Switching delay timer for SET2
3*5	P-dF	5.0	5.0	Seconds	5.0 to 900.0*8	Time constant for the input filter
	RCJ	ON	ON	N/A	ON, OFF	Cold junction compensation
	ADJ0	0.0	0	Deviative engineering unit*6	-50 to +50 % FS	User's ZERO adjustment
	ADJS	0.0	0	Deviative engineering unit*6	-50 to +50 % FS	User's SPAN adjustment
	P-d0	0	0	Seconds	0 to 20	Power ON delay time

*3. Pressing SEL key for 3 seconds turn the unit into setting mode for Parameter block 1.
*4. Pressing SEL key for 7 seconds turn the unit into setting mode for Parameter block 2.
*5. Pressing SEL key for 9 seconds turn the unit into setting mode for Parameter block 3.
*6. Parameters set with "Engineering unit" or "Deviative engineering unit" shift according to changes in P-SL or P-SU setting.
*7. 0 or 1 for temperature sensor; 0, 1, 2 for voltage signal. (1 for one-place decimal, 2 for two-place decimal)
*8. Be sure to set at the minimum of 5.0 or a larger value though the unit accepts one smaller than 5.0.

7.4. HOW TO SET PARAMETER BLOCK 1

Press SEL key for 3 seconds until the display turns to the setting mode for Parameter block 1.

7.4.1. Alarm SET 1 parameter

[Example]

Changing alarm setpoint (ST1) for SET1 from 100 to 200.

Key	Status or Operation	Display
	Current display (PTn = 1 in this example)	Display pattern 1 Upper = ST1 (setpoint) Lower = ST2 (setpoint)
SEL	Keep pressing the key for 3 seconds. →Maintain while the display indicates Pattern 2, Pattern 3.	Upper = blank Lower = ST1
SEL	Press the key once. →ST1 is replaced with current setting.	Upper = blank Lower = 100
UP DOWN	Press the keys until the display indicates 200. tes 200. (New value is registered if the unit is not accessed for 3 seconds.)	Upper = blank Lower = 200
SEL	Press the key once. →The lower display indicates the parameter name (ST1) again.	Upper = blank Lower = ST1
SEL	Keep pressing the key for 3 seconds. →Maintain while the display changes.	Display pattern 1 Upper = ST1 (setpoint) Lower = ST2 (setpoint)

7.4.2. Alarm SET 2 parameter

[Example]

Changing alarm setpoint (ST2) for SET2 from 100 to 50.

Key	Status or Operation	Display
	Current display (PTn = 1 in this example)	Display pattern 1 Upper = ST1 (setpoint) Lower = ST2 (setpoint)
SEL	Keep pressing the key for 3 seconds. →Maintain while the display indicates Pattern 2, Pattern 3.	Upper = blank Lower = ST1
DOWN	Press the key once. →Next parameter name is displayed.	Upper = black Lower = ST2
SEL	Press the key once. →ST2 is replaced with current setting.	Upper = blank Lower = 100
UP DOWN	Press the keys until the display indicates 50. (New value is registered if the unit is not accessed for 3 seconds.)	Upper = blank Lower = 50
SEL	Press the key once. →The lower display indicates the parameter name (ST2) again.	Upper = blank Lower = ST2
SEL	Keep pressing the key for 3 seconds. →Maintain while the display changes.	Display pattern 1 Upper = ST1 (setpoint) Lower = ST2 (setpoint)

7.4.3. Display pattern

Selecting which display pattern should be indicated first after the power is turned on, or when the unit returns to display mode from setting mode.

[Example] Changing display pattern (PTn) 1 to 2.

Key	Status or Operation	Display
	Current display (PTn = 1 in this example)	Display pattern 1 Upper = ST1 (setpoint) Lower = ST2 (setpoint)
SEL	Keep pressing the key for 3 seconds. →Maintain while the display indicates Pattern 2, Pattern 3.	Upper = blank Lower = ST1
DOWN	Press the key twice. →Next parameter name is displayed.	Upper = blank Lower = PTn
SEL	Press the key once. →PTn is replaced with current setting.	Upper = blank Lower = 1
UP DOWN	Press the keys until the display indicates 3. (New value is registered if the unit is not accessed for 3 seconds.)	Upper = blank Lower = 3
SEL	Press the key once. →The lower display indicates the parameter name (PTn) again.	Upper = blank Lower = PTn
SEL	Keep pressing the key for 3 seconds. →Maintain while the display changes.	Display pattern 3 Upper = blank Lower = blank

7.5. HOW TO SET PARAMETER BLOCK 2

Press SEL key for 7 seconds until the display turns to the setting mode for Parameter block 2.

7.5.1. Hysteresis for SET1

[Example]

Changing hysteresis (HYS1) for SET1 from 1°C to 5°C.

Key	Status or Operation	Display
	Current display (PTn = 3 in this example)	Display pattern 3 Upper = blank Lower = blank
SEL	Keep pressing the key for 7 seconds. →Maintain while the display indicates Pattern 2, Pattern 3, and Parameter block 1, until HYS1 is on the display.	Upper = blank Lower = HYS1
SEL	Press the key once. →HYS1 is replaced with current seting.	Upper = blank Lower = 1
UP DOWN	Press the keys until the display indicates 5. (New value is registered if the unit is not accessed for 3 sec.)	Upper = blank Lower = 5
SEL	Press the key once. →The lower display indicates the parameter name (HYS1) again.	Upper = blank Lower = HYS1
SEL	Keep pressing the key for 3 seconds. →Maintain while the display changes.	Display pattern 3 Upper = blank Lower = blank

7.5.2. Hysteresis for SET2

[Example]

Changing hysteresis (HYS2) for SET2 from 1°C to 3°C.

Key	Status or Operation	Display
	Current display (PTn = 3 in this example)	Display pattern 3 Upper = blank Lower = blank
SEL	Keep pressing the key for 7 seconds. →Maintain while the display indicates Pattern 2, Pattern 3, and Parameter block 1, until HYS1 is on the display.	Upper = blank Lower = HYS1
DOWN	Press the key once. →Next parameter name is displayed.	Upper = blank Lower = HYS2
SEL	Press the key once. →HYS2 is replaced with current setting.	Upper = blank Lower = 1
UP DOWN	Press the keys until the display indicates 3. (New value is registered if the unit is not accessed for 3 sec.)	Upper = blank Lower = 3
SEL	Press the key once. →The lower display indicates the parameter name (HYS2) again.	Upper = blank Lower = HYS2
SEL	Keep pressing the key for 3 seconds. →Maintain while the display changes.	Display pattern 3 Upper = blank Lower = blank

7.5.3. Input type

[Example] Changing input type (P-n2) from K (3) to J (2).

Key	Status or Operation	Display
	Current display (PTn = 2 in this example)	Display pattern 2 Upper = PV Lower = blank
SEL	Keep pressing the key for 7 seconds. →Maintain while the display indicates Pattern 2, Pattern 3, and Parameter block 1, until HYS1 is on the display.	Upper = blank Lower = HYS1
DOWN	Press the key twice. →Next parameter name is displayed.	Upper = blank Lower = P-n2
SEL	Press the key once. →P-n2 is replaced with current setting.	Upper = blank Lower = 3
UP DOWN	Press the keys until the display indicates 2. (New value is registered if the unit is not accessed for 3 sec.)	Upper = blank Lower = 2
SEL	Press the key once. →The lower display indicates the parameter name (P-n2) again.	Upper = blank Lower = P-n2
SEL	Keep pressing the key for 3 seconds. →Maintain while the display changes.	Display pattern 2 Upper = PV Lower = blank

7.5.4. Scaling (P-SL, P-SU)

[Example]

Changing scale (input range) from 0 – 400°C to -100 – 200°C.

Key	Status or Operation	Display
	Current display (PTn = 2 in this example)	Display pattern 2 Upper = PV Lower = blank
SEL	Keep pressing the key for 7 seconds. →Maintain while the display indicates Pattern 2, Pattern 3, and Parameter block 1, until HYS1 is on the display.	Upper = blank Lower = HYS1
DOWN	Press the key three times. →Next parameter name is displayed.	Upper = blank Lower = P-SL
SEL	Press the key once. →P-SL is replaced with current setting.	Upper = blank Lower = 0
UP DOWN	Press the keys until the display indicates -100. (New value is registered if the unit is not accessed for 3 sec.)	Upper = blank Lower = -100
SEL	Press the key once. →The lower display indicates the parameter name (P-SL) again.	Upper = blank Lower = P-SL
DOWN	Press the key once. →Next parameter name is displayed.	Upper = blank Lower = P-SU
SEL	Press the key once. →P-SU is replaced with current setting.	Upper = blank Lower = 400
UP DOWN	Press the keys until the display indicates 200. (New value is registered if the unit is not accessed for 3 sec.)	Upper = blank Lower = 200
SEL	Press the key once. →The lower display indicates the parameter name (P-SU) again.	Upper = blank Lower = P-SU
SEL	Keep pressing the key for 3 seconds. →Maintain while the display changes.	Display pattern 2 Upper = PV Lower = blank

7.5.5. Decimal point position for the scaled range

[Example]

Changing decimal point position (P-dP) from XXX to XXX.X.

Key	Status or Operation	Display
	Current display (PTn = 2 in this example)	Display pattern 2 Upper = PV Lower = blank
SEL	Keep pressing the key for 7 seconds. →Maintain while the display indicates Pattern 2, Pattern 3, and Parameter block 1, until HYS1 is on the display.	Upper = blank Lower = HYS1
DOWN	Press the key five times. →Next parameter name is displayed.	Upper = blank Lower = P-dP
SEL	Press the key once. →P-dP is replaced with current setting.	Upper = blank Lower = 0
UP DOWN	Press the keys until the display indicates 1. (New value is registered if the unit is not accessed for 3 sec.)	Upper = blank Lower = 1
SEL	Press the key once. →The lower display indicates the parameter name (P-dP) again.	Upper = blank Lower = P-dP
SEL	Keep pressing the key for 3 seconds. →Maintain while the display changes.	Display pattern 2 Upper = PV Lower = blank

■ SETPOINT v.s. DECIMAL POINT POSITION

Code	Decimal point position	Notes
0	XXXX	No decimal point
1	XXX.X	One-place decimal
2	XX.XX	Two-place decimal

7.5.6. Alarm mode for SET1 and SET2 (P-A1, P-A2)

Changing trip operation, latching hold and relay & LED behavior for SET1 and SET2.

[Example]

SET1: High trip, without latching hold, coil energized (1)
→ High trip, with latching hold, coil energized (3)

SET2: Low trip, with latching hold, coil energized (4)
→ Low trip, without latching hold, coil de-energized (6)

Key	Status or Operation	Display
	Current display (PTn = 2 in this example)	Display pattern 1 Upper = ST1 (setpoint) Lower = ST2 (setpoint)
SEL	Keep pressing the key for 7 seconds. →Maintain while the display indicates Pattern 2, Pattern 3, and Parameter block 1, until HYS1 is on the display.	Upper = blank Lower = HYS1
DOWN	Press the key six times. →Next parameter name is displayed.	Upper = blank Lower = P-A1
SEL	Press the key once. →P-A1 is replaced with current setting.	Upper = blank Lower = 1
UP DOWN	Press the keys until the display indicates 3. (New value is registered if the unit is not accessed for 3 sec.)	Upper = blank Lower = 3
SEL	Press the key once. →The lower display indicates the parameter name (P-A1) again.	Upper = blank Lower = P-A1
DOWN	Press the key once. →Next parameter name is displayed.	Upper = blank Lower = P-A2
SEL	Press the key once. →P-A2 is replaced with current setting.	Upper = blank Lower = 4
UP DOWN	Press the keys until the display indicates 6. (New value is registered if the unit is not accessed for 3 sec.)	Upper = blank Lower = 6
SEL	Press the key once. →The lower display indicates the parameter name (P-A2) again.	Upper = blank Lower = P-A2
SEL	Keep pressing the key for 3 seconds. →Maintain while the display changes.	Display pattern 1 Upper = ST1 (setpoint) Lower = ST2 (setpoint)

7.5.7. Burnout protection (bUm)

[Example] Changing internal input value in case of burnout (over-range included) from downscale (L) to upscale (H).

Key	Status or Operation	Display
	Current display (PTn = 1 in this example)	Display pattern 1 Upper = ST1 (setpoint) Lower = ST2 (setpoint)
SEL	Keep pressing the key for 7 seconds. →Maintain while the display indicates Pattern 2, Pattern 3, and Parameter block 1, until HYS1 is on the display.	Upper = blank Lower = HYS1
DOWN	Press the key 8 times. →Next parameter name is displayed.	Upper = blank Lower = bUm
SEL	Press the key once. →bUm is replaced with current setting.	Upper = blank Lower = L
UP DOWN	Press the keys until the display indicates H. (New value is registered if the unit is not accessed for 3 seconds.)	Upper = blank Lower = H
SEL	Press the key once. →The lower display indicates the parameter name (bUm) again.	Upper = blank Lower = bUm
SEL	Keep pressing the key for 3 seconds. →Maintain while the display changes.	Display pattern 1 Upper = ST1 (setpoint) Lower = ST2 (setpoint)

7.5.8. Temperature unit (KS2TR only)

[Example] Changing temperature unit (P-F) from °C to °F.

Key	Status or Operation	Display
	Current display (PTn = 2 in this example)	Display pattern 2 Upper = PV Lower = blank
SEL	Keep pressing the key for 7 seconds. →Maintain while the display indicates Pattern 2, Pattern 3, and Parameter block 1, until HYS1 is on the display.	Upper = blank Lower = HYS1
DOWN	Press the key nine times. →Next parameter name is displayed.	Upper = blank Lower = P-F
SEL	Press the key once. →P-F is replaced with current setting.	Upper = blank Lower = °C
UP DOWN	Press the keys until the display indicates °F. (New value is registered if the unit is not accessed for 3 sec.)	Upper = blank Lower = °F
SEL	Press the key once. →The lower display indicates the parameter name (P-F) again.	Upper = blank Lower = P-F
SEL	Keep pressing the key for 3 seconds. →Maintain while the display changes.	Display pattern 2 Upper = PV Lower = blank

7.5.9. Switching delay time for SET1 and ST2

Changing switching delay time (P-d1, P-d2) for SET1 and SET2.

[Example] SET1: 1 sec. → 10 sec. SET2: 1 sec. → 4 sec.

Key	Status or Operation	Display
	Current display (PTn = 2 in this example)	Display pattern 1 Upper = ST1 (setpoint) Lower = ST2 (setpoint)
SEL	Keep pressing the key for 7 seconds. →Maintain while the display indicates Pattern 2, Pattern 3, and Parameter block 1, until HYS1 is on the display.	Upper = blank Lower = HYS1
DOWN	Press the key ten times. →Next parameter name is displayed.	Upper = blank Lower = P-d1
SEL	Press the key once. →P-d1 is replaced with current setting.	Upper = blank Lower = 1
UP DOWN	Press the keys until the display indicates 10. (New value is registered if the unit is not accessed for 3 sec.)	Upper = blank Lower = 10
SEL	Press the key once. →The lower display indicates the parameter name (P-d1) again.	Upper = blank Lower = P-d1
DOWN	Press the key once. →Next parameter name is displayed.	Upper = blank Lower = P-d2
SEL	Press the key once. →P-d2 is replaced with current setting.	Upper = blank Lower = 1
UP DOWN	Press the keys until the display indicates 4. (New value is registered if the unit is not accessed for 3 sec.)	Upper = blank Lower = 4
SEL	Press the key once. →The lower display indicates the parameter name (P-d2) again.	Upper = blank Lower = P-d2
SEL	Keep pressing the key for 3 seconds. →Maintain while the display changes.	Display pattern 1 Upper = ST1 (setpoint) Lower = ST2 (setpoint)

7.6. HOW TO SET PARAMETER BLOCK 3

Press SEL key for 9 seconds until the display turns to the setting mode for Parameter block 3.

7.6.1. Time constant for the input filter

[Example] Changing time constant for the input filter (P-dF) from 5.0 sec. to 10.0 sec.

Key	Status or Operation	Display
	Current display (PTn = 1 in this example)	Display pattern 1 Upper = ST1 (setpoint) Lower = ST2 (setpoint)
SEL	Keep pressing the key for 9 seconds. →Maintain while the display indicates Pattern 2, Pattern 3, and Parameter block 1, 2, until P-dF is on the display.	Upper = blank Lower = P-dF
SEL	Press the key once. →P-dF is replaced with current setting.	Upper = blank Lower = 5.0
UP DOWN	Press the keys until the display indicates 10.0. (New value is registered if the unit is not accessed for 3 seconds.)	Upper = blank Lower = 10.0
SEL	Press the key once. →The lower display indicates the parameter name (P-dF) again.	Upper = blank Lower = P-dF
SEL	Keep pressing the key for 3 seconds. →Maintain while the display changes.	Display pattern 1 Upper = ST1 (setpoint) Lower = ST2 (setpoint)

7.6.2. Cold junction compensation

[Example] Changing cold junction compensation (RCJ) ON (internal) to OFF (external).

Key	Status or Operation	Display
	Current display (PTn = 1 in this example)	Display pattern 1 Upper = ST1 (setpoint) Lower = ST2 (setpoint)
SEL	Keep pressing the key for 9 seconds. →Maintain while the display indicates Pattern 2, Pattern 3, and Parameter block 1, 2, until P-dF is on the display.	Upper = blank Lower = P-dF
DOWN	Press the key once. →Next parameter name is displayed.	Upper = blank Lower = RCJ
SEL	Press the key once. →RCJ is replaced with current setting.	Upper = blank Lower = ON
UP DOWN	Press the keys until the display indicates OFF. (New value is registered if the unit is not accessed for 3 sec.)	Upper = blank Lower = OFF
SEL	Press the key once. →The lower display indicates the parameter name (RCJ) again.	Upper = blank Lower = RCJ
SEL	Keep pressing the key for 3 seconds. →Maintain while the display changes.	Display pattern 1 Upper = ST1 (setpoint) Lower = ST2 (setpoint)

7.6.3. User's ZERO adjustment

[Example]

Calibrate display value with 0% input (ADJ0) from 2 to 0.

ADJ0: 0 → -2

Key	Status or Operation	Display
	Current display (PTn = 1 in this example)	Display pattern 1 Upper = ST1 (setpoint) Lower = ST2 (setpoint)
SEL	Keep pressing the key for 9 seconds. →Maintain while the display indicates Pattern 2, Pattern 3, and Parameter block 1, 2, until P-dF is on the display.	Upper = blank Lower = P-dF
DOWN	Press the key twice. →Next parameter name is displayed.	Upper = blank Lower = ADJ0
SEL	Press the key once. →ADJ0 is replaced with current setting.	Upper = blank Lower = 0
UP DOWN	Press the keys until the display indicates -2. (New value is registered if the unit is not accessed for 3 sec.)	Upper = blank Lower = -2
SEL	Press the key once. →The lower display indicates the parameter name (ADJ0) again.	Upper = blank Lower = ADJ0
SEL	Keep pressing the key for 3 seconds. →Maintain while the display changes.	Display pattern 1 Upper = ST1 (setpoint) Lower = ST2 (setpoint)

7.6.4. User's SPAN adjustment

[Example] Calibrate display value with 100% input (ADJS) from 99 to 100.

ADJS: 0 → 1

Key	Status or Operation	Display
	Current display (PTn = 1 in this example)	Display pattern 1 Upper = ST1 (setpoint) Lower = ST2 (setpoint)
SEL	Keep pressing the key for 9 seconds. →Maintain while the display indicates Pattern 2, Pattern 3, and Parameter block 1, 2, until P-dF is on the display.	Upper = blank Lower = P-dF
DOWN	Press the key three times. →Next parameter name is displayed.	Upper = blank Lower = ADJS
SEL	Press the key once. →ADJS is replaced with current setting.	Upper = blank Lower = 0
UP DOWN	Press the keys until the display indicates 1. (New value is registered if the unit is not accessed for 3 sec.)	Upper = blank Lower = 1
SEL	Press the key once. →The lower display indicates the parameter name (ADJS) again.	Upper = blank Lower = ADJS
SEL	Keep pressing the key for 3 seconds. →Maintain while the display changes.	Display pattern 1 Upper = ST1 (setpoint) Lower = ST2 (setpoint)

7.6.5. Power ON delay time (P-d0)

[Example]

Changing power ON delay time (the time interval for the alarm outputs to be enabled after the power is turned on.) from 0 sec. to 3 sec.

Key	Status or Operation	Display
	Current display (PTn = 1 in this example)	Display pattern 1 Upper = ST1 (setpoint) Lower = ST2 (setpoint)
SEL	Keep pressing the key for 9 seconds. →Maintain while the display indicates Pattern 2, Pattern 3, and Parameter block 1, 2, until P-dF is on the display.	Upper = blank Lower = P-dF
DOWN	Press the key four times. →Next parameter name is displayed.	Upper = blank Lower = P-d0
SEL	Press the key once. →P-d0 is replaced with current setting.	Upper = blank Lower = 0
UP DOWN	Press the keys until the display indicates 3. (New value is registered if the unit is not accessed for 3 sec.)	Upper = blank Lower = 3
SEL	Press the key once. →The lower display indicates the parameter name (P-d0) again.	Upper = blank Lower = P-d0
SEL	Keep pressing the key for 3 seconds. →Maintain while the display changes.	Display pattern 1 Upper = ST1 (setpoint) Lower = ST2 (setpoint)

APPENDIX

■ INPUT TYPE v.s. PARAMETER CODE NO.

Input type	Sensor type	Parameter code No. (P-n2)
RTD	JPt 100 (old JIS)	0
	Pt 100 (IEC, JIS)	1
Thermocouple	J	2
	K	3
	R	4
	B	5
	S	6
	T	7
	E	8
	N	12
	PL2	13
	WRe5-26	14
DC voltage	1-5 V DC	16

■ INPUT RANGE

Sensor type	Range °C	Range °F	Decimal °C	Decimal °F
RTD (IEC, JIS)				
Pt 100	0 to 150	32 to 302	Y	Y
Pt 100	0 to 300	32 to 572	Y	Y
Pt 100	0 to 500	32 to 932	Y	Y
Pt 100	0 to 600	32 to 1112	Y	N
Pt 100	-50 to 100	-58 to 212	Y	Y
Pt 100	-100 to 200	-148 to 392	Y	Y
Pt 100	-150 to 600	-238 to 1112	Y	N
Pt 100	-150 to 850	-238 to 1562	N	N
RTD (old JIS)				
JPt 100	0 to 150	32 to 302	Y	Y
JPt 100	0 to 300	32 to 572	Y	Y
JPt 100	0 to 500	32 to 932	Y	Y
JPt 100	0 to 600	32 to 1112	Y	N
JPt 100	-50 to 100	-58 to 212	Y	Y
JPt 100	-100 to 200	-148 to 392	Y	Y
JPt 100	-150 to 600	-238 to 1112	Y	N
Thermocouple				
J	0 to 400	32 to 752	Y	Y
J	0 to 800	32 to 1472	Y	N
K	0 to 400	32 to 752	Y	Y
K	0 to 800	32 to 1472	Y	N
K	0 to 1200	32 to 2192	N	N
R	0 to 1600	32 to 2912	N	N
B	0 to 1800	32 to 3272	N	N
S	0 to 1600	32 to 2912	N	N
T	-199 to 200	-328 to 392	Y	N
T	-150 to 400	-238 to 752	Y	N
E	0 to 800	32 to 1472	Y	N
E	-199 to 800	-328 to 1472	Y	N
N	0 to 1300	32 to 2372	N	N
PL2	0 to 1300	32 to 2372	N	N
WRe5-26	0 to 2300	32 to 4172	N	N
DC voltage				
1-5 V DC*9	-1999 to 1999 (scalable)			

*9. For 4-20 mA DC, 2-10 mA DC, 10-50 mA DC inputs, attach an external resistor module (model: REM) and handle the unit just as accepting 1-5 V DC input.

■ ALARM MODE v.s. PARAMETER CODE NO.

Param. code (P-A1) (P-A2)	Alarm modes			
	Trip operation	Set value	Latching hold*10	Relay & LED behavior in tripped conditions
0	No alarm	–	–	–
1	High	Absolute value	Without	LED ON Coil energized
2	Low	Absolute value	Without	LED ON Coil energized
3	High	Absolute value	With	LED ON Coil energized
4	Low	Absolute value	With	LED ON Coil energized
5	High	Absolute value	Without	LED ON Coil de-energized
6	Low	Absolute value	Without	LED ON Coil de-energized
7	High	Absolute value	With	LED ON Coil de-energized
8	Low	Absolute value	With	LED ON Coil de-energized

*10. Without latching hold function, the unit is tripped upon starting operation (e.g. at 25°C) when the unit is set to Low alarm (e.g. 100°C).
With the function, the unit is NOT tripped until the temperature goes once above and then below the setpoint (100°C).

M-SYSTEM WARRANTY

M-System warrants such new M-System product which it manufactures to be free from defects in materials and workmanship during the 36-month period following the date that such product was originally purchased if such product has been used under normal operating conditions and properly maintained, M-System's sole liability, and purchaser's exclusive remedies, under this warranty are, at M-System's option, the repair, replacement or refund of the purchase price of any M-System product which is defective under the terms of this warranty. To submit a claim under this warranty, the purchaser must return, at its expense, the defective M-System product to the below address together with a copy of its original sales invoice. THIS IS THE ONLY WARRANTY APPLICABLE TO M-SYSTEM PRODUCT AND IS IN LIEU OF ALL OTHER WARRANTIES, EXPRESS OR IMPLIED, INCLUDING ANY IMPLIED WARRANTIES OF MERCHANTABILITY OR FITNESS FOR A PARTICULAR PURPOSE. M-SYSTEM SHALL HAVE NO LIABILITY FOR CONSEQUENTIAL, INCIDENTAL OR SPECIAL DAMAGES OF ANY KIND WHATSOEVER.
M-System Co., Ltd., 5-2-55, Minamitsumori, Nishinari-ku, Osaka 557-0063 JAPAN, Phone: (06) 6659-8201, Fax: (06) 6659-8510, E-mail: info@m-system.co.jp